Chapitre III : Solution proposé

III.1. Introduction

III.2. Encodage

III.3. Groupe stabilisateur

III.4. Calcule des syndromes

III.5. Décodage

III.6. Vérification formelle

III.7. Conclusion

III.1. Introduction :

La théorie des codes correcteurs s'intéresse à la protection de l'information [19]. Cette tâche est réalisée généralement en s'appuyant sur un encodage préalable bien choisi basé sur la redondance.

Ces dernières années, des évolutions importantes ont eu lieu dans le domaine quantique. De nombreux travaux théoriques ont conduit à la naissance de nouvelles solutions. Les plus intéressantes sont les codes stabilisateurs.

Dans ce chapitre, nous présentons une nouvelle variante avec 4 qubits supplémentaires mais l'étape d'encodage nécessite dix portes quantiques seulement.

III.2. Encodage :

Le circuit d'encodage est le suivant :

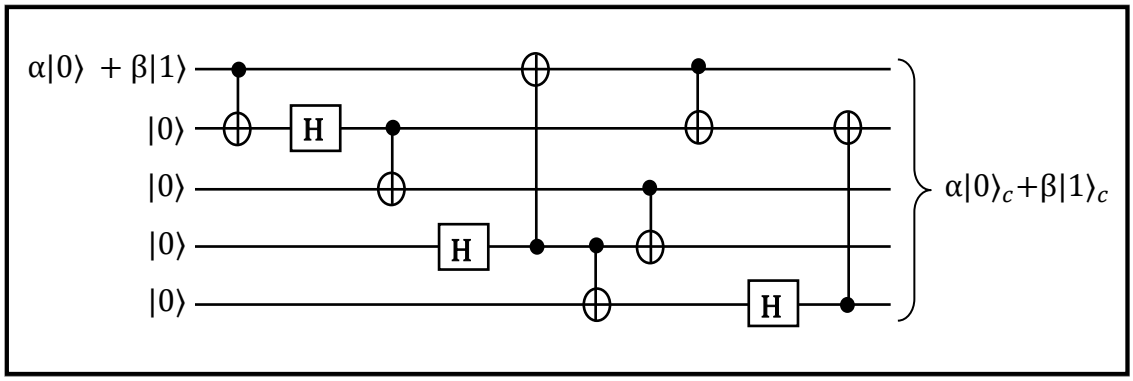

Fig. 3.1 : *Le circuit d'encodage.*

III.3. Groupe stabilisateur :

	5	4	3	2	1
M_0	I	Z	X	Z	X
M_1	Z	I	Z	Z	Z
M_2	X	Z	Z	X	I
M_3	X	X	X	I	Z

Tab 3.1: *Les stabilisateurs.*

III.4. Calcul des syndromes :

Le syndrome associé à chaque type d'erreur est donné par le circuit suivant :

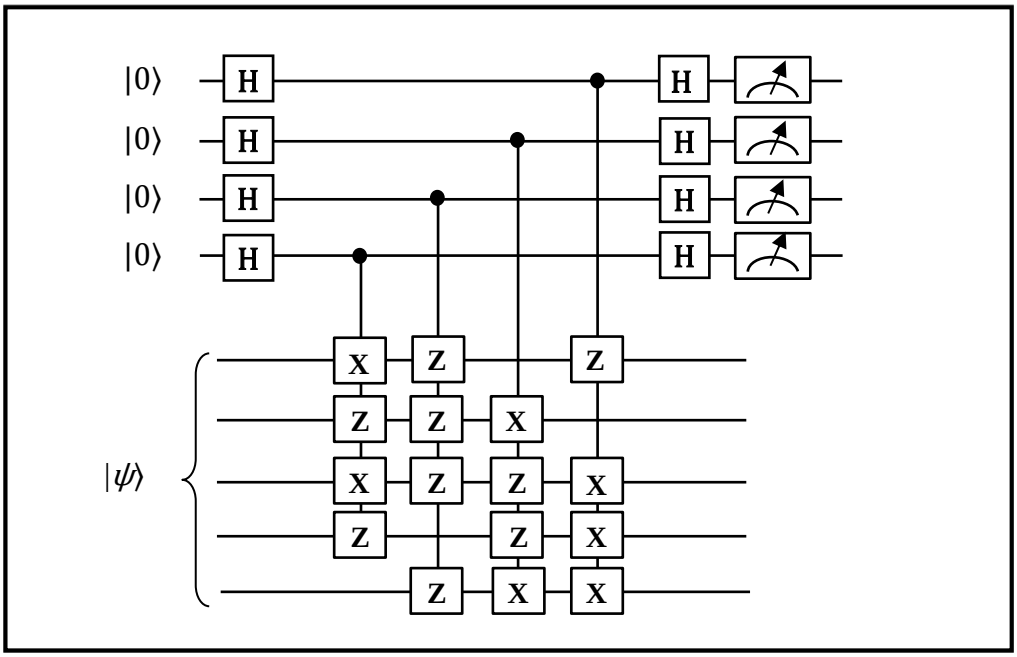

Fig. 3.2 : *Calcul des syndromes d'erreur.*

Les syndromes d'erreurs sont résumés dans le tableau qui suit :

	$X_0Y_0Z_0$	$X_1Y_1Z_1$	$X_2Y_2Z_2$	$X_3Y_3Z_3$	$X_4Y_4Z_4$	1
$M_0 = X_0Z_1X_2Z_3$	$+--$	$--+$	$+--$	$--+$	$+++$	$+$
$M_1 = Z_0Z_1Z_2Z_4$	$--+$	$--+$	$--+$	$+++$	$--+$	$+$
$M_2 = X_1Z_2Z_3X_4$	$+++$	$+--$	$--+$	$--+$	$+--$	$+$
$M_3 = Z_0X_2X_3X_4$	$--+$	$+++$	$+--$	$+--$	$+--$	$+$

Tab 3.2: *Syndromes d'erreurs .*

III.5. Décodage :

Le circuit de décodage est le suivant :

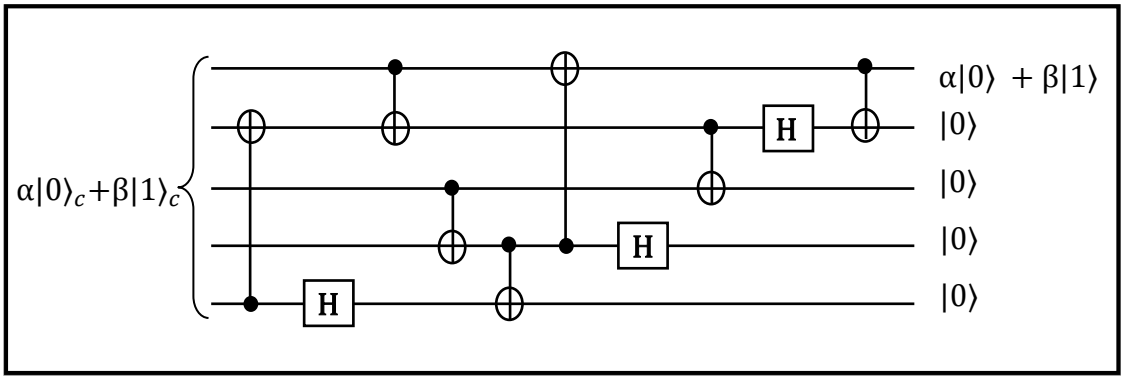

Fig. 3.3: *Le circuit de décodage.*

III.6. Vérification formelle :

Soit le qubit ψ définit par :

$$|\psi\rangle = \alpha|0\rangle + \beta|1\rangle$$

On commence par une étape d'encodage. Elle consiste d'abord à l'ajout de quatre qubits supplémentaires. Ensuite, on procède par une intrication de tout le système quantique y compris le qubit initial.

$$|\psi_1\rangle = \alpha\,|00000\rangle + \beta\,|10000\rangle$$

- Porte 01 : CNot(1,2)

$$|\psi_2\rangle = \alpha\,|00000\rangle + \beta\,|11000\rangle$$

- Porte 02 : H(2)

$$|\psi_2\rangle = \frac{\alpha}{\sqrt{2}}\,|00000\rangle + \frac{\alpha}{\sqrt{2}}\,|01000\rangle + \frac{\beta}{\sqrt{2}}\,|10000\rangle - \frac{\beta}{\sqrt{2}}\,|11000\rangle$$

- Porte 03 : CNot(2 ,3)

$$|\psi_2\rangle = \frac{\alpha}{\sqrt{2}}\,|00000\rangle + \frac{\alpha}{\sqrt{2}}\,|01100\rangle + \frac{\beta}{\sqrt{2}}\,|10000\rangle - \frac{\beta}{\sqrt{2}}\,|11100\rangle$$

- Porte 04 : H(4)

$$|\psi_2\rangle = \frac{\alpha}{2}\,|00000\rangle + \frac{\alpha}{2}\,|00010\rangle + \frac{\alpha}{2}\,|01100\rangle + \frac{\alpha}{2}\,|01110\rangle + \frac{\beta}{2}\,|10000\rangle + \frac{\beta}{2}\,|10010\rangle - \frac{\beta}{2}\,|11100\rangle - \frac{\beta}{2}\,|11110\rangle$$

- Porte 05 : CNot(4,1)

$$|\psi_2\rangle = \frac{\alpha}{2}\,|00000\rangle + \frac{\alpha}{2}\,|10010\rangle + \frac{\alpha}{2}\,|01100\rangle + \frac{\alpha}{2}\,|11110\rangle + \frac{\beta}{2}\,|10000\rangle + \frac{\beta}{2}\,|00010\rangle - \frac{\beta}{2}\,|11100\rangle - \frac{\beta}{2}\,|01110\rangle$$

- Porte 06 : CNot(4,5)

$$|\psi_2\rangle = \frac{\alpha}{2}\,|00000\rangle + \frac{\alpha}{2}\,|10011\rangle + \frac{\alpha}{2}\,|01100\rangle + \frac{\alpha}{2}\,|11111\rangle + \frac{\beta}{2}\,|10000\rangle + \frac{\beta}{2}\,|00011\rangle - \frac{\beta}{2}\,|11100\rangle - \frac{\beta}{2}\,|01111\rangle$$

- Porte 07 : CNot(3,4)

$$|\psi_2\rangle = \frac{\alpha}{2}\,|00000\rangle + \frac{\alpha}{2}\,|10011\rangle + \frac{\alpha}{2}\,|01110\rangle + \frac{\alpha}{2}\,|11101\rangle + \frac{\beta}{2}\,|10000\rangle + \frac{\beta}{2}\,|00011\rangle - \frac{\beta}{2}\,|11110\rangle - \frac{\beta}{2}\,|01101\rangle$$

- Porte 08 : CNot(1,2)

$$|\psi_2\rangle = \frac{\alpha}{2}\,|00000\rangle + \frac{\alpha}{2}\,|11011\rangle + \frac{\alpha}{2}\,|01110\rangle + \frac{\alpha}{2}\,|10101\rangle + \frac{\beta}{2}\,|11000\rangle + \frac{\beta}{2}\,|00011\rangle - \frac{\beta}{2}\,|10110\rangle - \frac{\beta}{2}\,|01101\rangle$$

- Porte 09 : H(5)

$|\psi_2\rangle = \frac{\alpha}{2\sqrt{2}}|00000\rangle + \frac{\alpha}{2\sqrt{2}}|00001\rangle + \frac{\alpha}{2\sqrt{2}}|11010\rangle - \frac{\alpha}{2\sqrt{2}}|11011\rangle + \frac{\alpha}{2\sqrt{2}}|01110\rangle + \frac{\alpha}{2\sqrt{2}}|01111\rangle + \frac{\alpha}{2\sqrt{2}}|10100\rangle - \frac{\alpha}{2\sqrt{2}}|10101\rangle + \frac{\beta}{2\sqrt{2}}|11000\rangle + \frac{\beta}{2\sqrt{2}}|11001\rangle + \frac{\beta}{2\sqrt{2}}|00010\rangle - \frac{\beta}{2\sqrt{2}}|00011\rangle - \frac{\beta}{2\sqrt{2}}|10110\rangle - \frac{\beta}{2\sqrt{2}}|10111\rangle - \frac{\beta}{2\sqrt{2}}|01100\rangle + \frac{\beta}{2\sqrt{2}}|01101\rangle$

- Porte 10 : CNot(5,2)

$|\psi_2\rangle = \frac{\alpha}{2\sqrt{2}}|00000\rangle + \frac{\alpha}{2\sqrt{2}}|01001\rangle + \frac{\alpha}{2\sqrt{2}}|11010\rangle - \frac{\alpha}{2\sqrt{2}}|10011\rangle + \frac{\alpha}{2\sqrt{2}}|01110\rangle + \frac{\alpha}{2\sqrt{2}}|00111\rangle + \frac{\alpha}{2\sqrt{2}}|10100\rangle - \frac{\alpha}{2\sqrt{2}}|11101\rangle + \frac{\beta}{2\sqrt{2}}|11000\rangle + \frac{\beta}{2\sqrt{2}}|10001\rangle + \frac{\beta}{2\sqrt{2}}|00010\rangle - \frac{\beta}{2\sqrt{2}}|01011\rangle - \frac{\beta}{2\sqrt{2}}|10110\rangle - \frac{\beta}{2\sqrt{2}}|11111\rangle - \frac{\beta}{2\sqrt{2}}|01100\rangle + \frac{\beta}{2\sqrt{2}}|00101\rangle$

- ✓ $|\psi_2\rangle$ c'est l'état sans erreurs (le mot de code valide).

❖ Simulation d'une Erreur:

Injecter une erreur X sur le premier qubit :

$|\psi_3\rangle = \frac{\alpha}{2\sqrt{2}}|10000\rangle + \frac{\alpha}{2\sqrt{2}}|11001\rangle + \frac{\alpha}{2\sqrt{2}}|01010\rangle - \frac{\alpha}{2\sqrt{2}}|00011\rangle + \frac{\alpha}{2\sqrt{2}}|11110\rangle + \frac{\alpha}{2\sqrt{2}}|10111\rangle + \frac{\alpha}{2\sqrt{2}}|00100\rangle - \frac{\alpha}{2\sqrt{2}}|01101\rangle + \frac{\beta}{2\sqrt{2}}|01000\rangle + \frac{\beta}{2\sqrt{2}}|00001\rangle + \frac{\beta}{2\sqrt{2}}|10010\rangle - \frac{\beta}{2\sqrt{2}}|11011\rangle - \frac{\beta}{2\sqrt{2}}|00110\rangle - \frac{\beta}{2\sqrt{2}}|01111\rangle - \frac{\beta}{2\sqrt{2}}|11100\rangle + \frac{\beta}{2\sqrt{2}}|10101\rangle$

❖ Mesure du syndrome :

Ajout des quatre qubits du syndrome:

$|\psi_3\rangle = \frac{\alpha}{2\sqrt{2}}|100000000\rangle + \frac{\alpha}{2\sqrt{2}}|110010000\rangle + \frac{\alpha}{2\sqrt{2}}|010100000\rangle - \frac{\alpha}{2\sqrt{2}}|000110000\rangle + \frac{\alpha}{2\sqrt{2}}|111100000\rangle + \frac{\alpha}{2\sqrt{2}}|101110000\rangle + \frac{\alpha}{2\sqrt{2}}|001000000\rangle - \frac{\alpha}{2\sqrt{2}}|011010000\rangle + \frac{\beta}{2\sqrt{2}}|010000000\rangle + \frac{\beta}{2\sqrt{2}}|000010000\rangle + \frac{\beta}{2\sqrt{2}}|100100000\rangle - \frac{\beta}{2\sqrt{2}}|110110000\rangle - \frac{\beta}{2\sqrt{2}}|001100000\rangle - \frac{\beta}{2\sqrt{2}}|011110000\rangle - \frac{\beta}{2\sqrt{2}}|111000000\rangle + \frac{\beta}{2\sqrt{2}}|101010000\rangle$

- Porte H(6) :

$|\psi_3\rangle = \frac{\alpha}{4}|100000000\rangle + \frac{\alpha}{4}|100001000\rangle + \frac{\alpha}{4}|110010000\rangle + \frac{\alpha}{4}|110011000\rangle + \frac{\alpha}{4}|010100000\rangle + \frac{\alpha}{4}|010101000\rangle - \frac{\alpha}{4}|000110000\rangle - \frac{\alpha}{4}|000111000\rangle + \frac{\alpha}{4}|111100000\rangle + \frac{\alpha}{4}|111101000\rangle + \frac{\alpha}{4}|101110000\rangle + \frac{\alpha}{4}|101111000\rangle + \frac{\alpha}{4}|001000000\rangle + \frac{\alpha}{4}|001001000\rangle - \frac{\alpha}{4}|011010000\rangle - \frac{\alpha}{4}|011011000\rangle + \frac{\beta}{4}|010000000\rangle + \frac{\beta}{4}|010001000\rangle + \frac{\beta}{4}|000010000\rangle + \frac{\beta}{4}|000011000\rangle + \frac{\beta}{4}|100100000\rangle + \frac{\beta}{4}|100101000\rangle - \frac{\beta}{4}|110110000\rangle - \frac{\beta}{4}|110111000\rangle - \frac{\beta}{4}|001100000\rangle - \frac{\beta}{4}|001101000\rangle - \frac{\beta}{4}|011110000\rangle - \frac{\beta}{4}|011111000\rangle - \frac{\beta}{4}|111000000\rangle - \frac{\beta}{4}|111001000\rangle + \frac{\beta}{4}|101010000\rangle + \frac{\beta}{4}|10101000\rangle.$

- Porte H(7) :

$|\psi_3\rangle = \frac{\alpha}{4\sqrt{2}}|100000000\rangle + \frac{\alpha}{4\sqrt{2}}|100000100\rangle + \frac{\alpha}{4\sqrt{2}}|100001000\rangle + \frac{\alpha}{4\sqrt{2}}|100001100\rangle + \frac{\alpha}{4\sqrt{2}}|110010000\rangle + \frac{\alpha}{4\sqrt{2}}|110010100\rangle + \frac{\alpha}{4\sqrt{2}}|110011000\rangle + \frac{\alpha}{4\sqrt{2}}|110011100\rangle + \frac{\alpha}{4\sqrt{2}}|010100000\rangle + \frac{\alpha}{4\sqrt{2}}|010100100\rangle + \frac{\alpha}{4\sqrt{2}}|010101000\rangle + \frac{\alpha}{4\sqrt{2}}|010101100\rangle - \frac{\alpha}{4\sqrt{2}}|000110000\rangle - \frac{\alpha}{4\sqrt{2}}|000110100\rangle - \frac{\alpha}{4\sqrt{2}}|000111000\rangle - \frac{\alpha}{4\sqrt{2}}|000111100\rangle + \frac{\alpha}{4\sqrt{2}}|111100000\rangle + \frac{\alpha}{4\sqrt{2}}|111100100\rangle + \frac{\alpha}{4\sqrt{2}}|111101000\rangle + \frac{\alpha}{4\sqrt{2}}|111101100\rangle + \frac{\alpha}{4\sqrt{2}}|101110000\rangle + \frac{\alpha}{4\sqrt{2}}|101110100\rangle + \frac{\alpha}{4\sqrt{2}}|101111000\rangle + \frac{\alpha}{4\sqrt{2}}|101111100\rangle + \frac{\alpha}{4\sqrt{2}}|001000000\rangle + \frac{\alpha}{4\sqrt{2}}|001000100\rangle + \frac{\alpha}{4\sqrt{2}}|001001000\rangle + \frac{\alpha}{4\sqrt{2}}|001001100\rangle - \frac{\alpha}{4\sqrt{2}}|011010000\rangle - \frac{\alpha}{4\sqrt{2}}$

$|011010100\rangle$- $\frac{\alpha}{4\sqrt{2}}$ $|011011000\rangle$-$\frac{\alpha}{4\sqrt{2}}$ $|011011100\rangle$+ $\frac{\beta}{4\sqrt{2}}$ $|010000000\rangle$+ $\frac{\beta}{4\sqrt{2}}$ $|010000100\rangle$+ $\frac{\beta}{4\sqrt{2}}$ $|010001000\rangle$+$\frac{\beta}{4\sqrt{2}}$ $|010001100\rangle$+ $\frac{\beta}{4\sqrt{2}}$ $|000010000\rangle$+ $\frac{\beta}{4\sqrt{2}}$ $|000010100\rangle$+ $\frac{\beta}{4\sqrt{2}}$ $|000011000\rangle$+$\frac{\beta}{4\sqrt{2}}$ $|000011100\rangle$+ $\frac{\beta}{4\sqrt{2}}$ $|100100000\rangle$+ $\frac{\beta}{4\sqrt{2}}$ $|100100100\rangle$+ $\frac{\beta}{4\sqrt{2}}$ $|100101000\rangle$+$\frac{\beta}{4\sqrt{2}}$ $|100101100\rangle$- $\frac{\beta}{4\sqrt{2}}$ $|110110000\rangle$- $\frac{\beta}{4\sqrt{2}}$ $|110110100\rangle$- $\frac{\beta}{4\sqrt{2}}$ $|110111000\rangle$-$\frac{\beta}{4\sqrt{2}}$ $|110111100\rangle$- $\frac{\beta}{4\sqrt{2}}$ $|001100000\rangle$- $\frac{\beta}{4\sqrt{2}}$ $|001100100\rangle$- $\frac{\beta}{4\sqrt{2}}$ $|001101000\rangle$-$\frac{\beta}{4\sqrt{2}}$ $|001101100\rangle$- $\frac{\beta}{4\sqrt{2}}$ $|011110000\rangle$- $\frac{\beta}{4\sqrt{2}}$ $|011110100\rangle$- $\frac{\beta}{4\sqrt{2}}$ $|011111000\rangle$-$\frac{\beta}{4\sqrt{2}}$ $|011111100\rangle$- $\frac{\beta}{4\sqrt{2}}$ $|111000000\rangle$- $\frac{\beta}{4\sqrt{2}}$ $|111000100\rangle$- $\frac{\beta}{4\sqrt{2}}$ $|1110010000\rangle$-$\frac{\beta}{4\sqrt{2}}$ $|111001100\rangle$+ $\frac{\beta}{4\sqrt{2}}$ $|101010000\rangle$+ $\frac{\beta}{4\sqrt{2}}$ $|101010100\rangle$+ $\frac{\beta}{4\sqrt{2}}$ $|101011000\rangle$+ $\frac{\beta}{4\sqrt{2}}$ $|101011100\rangle$.

- Porte H(8) :

$|\psi_3\rangle$ = $\frac{\alpha}{8}$ $|100000000\rangle$+$\frac{\alpha}{8}$ $|100000010\rangle$+$\frac{\alpha}{8}$ $|100000100\rangle$+$\frac{\alpha}{8}$ $|100000110\rangle$+ $\frac{\alpha}{8}$ $|100001000\rangle$+$\frac{\alpha}{8}$ $|10001010\rangle$+$\frac{\alpha}{8}$ $|100001100\rangle$+ $\frac{\alpha}{8}$ $|100001110\rangle$+ $\frac{\alpha}{8}$ $|110010000\rangle$+ $\frac{\alpha}{8}$ $|110010010\rangle$+ $\frac{\alpha}{8}$ $|110010100\rangle$+ $\frac{\alpha}{8}$ $|110010110\rangle$+ $\frac{\alpha}{8}$ $|110011000\rangle$+ $\frac{\alpha}{8}$ $|110011010\rangle$+ $\frac{\alpha}{8}$ $|110011100\rangle$+ $\frac{\alpha}{8}$ $|110011110\rangle$+ $\frac{\alpha}{8}$ $|010100000\rangle$+ $\frac{\alpha}{8}$ $|010100010\rangle$+ $\frac{\alpha}{8}$ $|010100100\rangle$+$\frac{\alpha}{8}$ $|010100110\rangle$+ $\frac{\alpha}{8}$ $|010101000\rangle$+$\frac{\alpha}{8}$ $|010101010\rangle$+$\frac{\alpha}{8}$ $|010101100\rangle$+$\frac{\alpha}{8}$ $|010101110\rangle$- $\frac{\alpha}{8}$ $|000110000\rangle$-$\frac{\alpha}{8}$ $|000110010\rangle$-$\frac{\alpha}{8}$ $|000110100\rangle$-$\frac{\alpha}{8}$ $|000110110\rangle$- $\frac{\alpha}{8}$ $|000111000\rangle$-$\frac{\alpha}{8}$ $|000111010\rangle$-$\frac{\alpha}{8}$ $|000111100\rangle$-$\frac{\alpha}{8}$ $|000111110\rangle$+$\frac{\alpha}{8}$ $|111100000\rangle$+ $\frac{\alpha}{8}$ $|111100010\rangle$+ $\frac{\alpha}{8}$ $|111100100\rangle$+ $\frac{\alpha}{8}$ $|111100110\rangle$+ $\frac{\alpha}{8}$ $|111101000\rangle$+ $\frac{\alpha}{8}$ $|111101010\rangle$+ $\frac{\alpha}{8}$ $|111101100\rangle$+ $\frac{\alpha}{8}$ $|111101110\rangle$+ $\frac{\alpha}{8}$ $|101110000\rangle$+ $\frac{\alpha}{8}$ $|101110010\rangle$+ $\frac{\alpha}{8}$ $|101110100\rangle$+ $\frac{\alpha}{8}$ $|101110110\rangle$+ $\frac{\alpha}{8}$ $|101111000\rangle$+ $\frac{\alpha}{8}$ $|101111010\rangle$+ $\frac{\alpha}{8}$ $|101111100\rangle$+ $\frac{\alpha}{8}$ $|101111110\rangle$+ $\frac{\alpha}{8}$ $|001000000\rangle$+ $\frac{\alpha}{8}$ $|001000010\rangle$+ $\frac{\alpha}{8}$ $|001000100\rangle$+$\frac{\alpha}{8}$ $|001000110\rangle$+ $\frac{\alpha}{8}$ $|001001000\rangle$+$\frac{\alpha}{8}$ $|001001010\rangle$+$\frac{\alpha}{8}$ $|001001100\rangle$+$\frac{\alpha}{8}$ $|001001110\rangle$- $\frac{\alpha}{8}$ $|011010000\rangle$-$\frac{\alpha}{8}$ $|011010010\rangle$-$\frac{\alpha}{8}$ $|011010100\rangle$-$\frac{\alpha}{8}$ $|011010110\rangle$- $\frac{\alpha}{8}$ $|011011000\rangle$-$\frac{\alpha}{8}$ $|011011010\rangle$-$\frac{\alpha}{8}$ $|011011100\rangle$ -$\frac{\alpha}{8}$ $|011011110\rangle$+$\frac{\beta}{8}$ $|010000000\rangle$+$\frac{\beta}{8}$ $|010000010\rangle$+$\frac{\beta}{8}$ $|010000100\rangle$ +$\frac{\beta}{8}$ $|010000110\rangle$+$\frac{\beta}{8}$ $|010001000\rangle$+$\frac{\beta}{8}$ $|010001010\rangle$+$\frac{\beta}{8}$ $|010001100\rangle$+$\frac{\beta}{8}$ $|010001110\rangle$+$\frac{\beta}{8}$ $|000010000\rangle$+$\frac{\beta}{8}$ $|000010010\rangle$+$\frac{\beta}{8}$ $|000010100\rangle$+$\frac{\beta}{8}$ $|000010110\rangle$+$\frac{\beta}{8}$ $|000011000\rangle$+$\frac{\beta}{8}$ $|000011010\rangle$+$\frac{\beta}{8}$ $|000011100\rangle$+$\frac{\beta}{8}$ $|000011110\rangle$+$\frac{\beta}{8}$ $|100100000\rangle$+$\frac{\beta}{8}$ $|100100010\rangle$+$\frac{\beta}{8}$ $|100100100\rangle$+$\frac{\beta}{8}$ $|100100110\rangle$+$\frac{\beta}{8}$ $|100101000\rangle$+$\frac{\beta}{8}$ $|100101010\rangle$+$\frac{\beta}{8}$ $|100101100\rangle$+$\frac{\beta}{8}$ $|100101110\rangle$-$\frac{\beta}{8}$ $|110110000\rangle$-$\frac{\beta}{8}$ $|110110010\rangle$-$\frac{\beta}{8}$ $|110110100\rangle$-$\frac{\beta}{8}$ $|110110110\rangle$-$\frac{\beta}{8}$ $|110111000\rangle$-$\frac{\beta}{8}$ $|110111010\rangle$-$\frac{\beta}{8}$ $|110111100\rangle$-$\frac{\beta}{8}$ $|110111110\rangle$-$\frac{\beta}{8}$ $|001100000\rangle$-$\frac{\beta}{8}$ $|001100010\rangle$-$\frac{\beta}{8}$ $|001100100\rangle$-$\frac{\beta}{8}$ $|001100110\rangle$-$\frac{\beta}{8}$ $|001101000\rangle$-$\frac{\beta}{8}$ $|001101010\rangle$-$\frac{\beta}{8}$ $|001101100\rangle$-$\frac{\beta}{8}$ $|001101110\rangle$-$\frac{\beta}{8}$ $|011110000\rangle$-$\frac{\beta}{8}$ $|011110010\rangle$-$\frac{\beta}{8}$ $|011110100\rangle$-$\frac{\beta}{8}$ $|011110110\rangle$-$\frac{\beta}{8}$ $|011111000\rangle$-$\frac{\beta}{8}$ $|011111010\rangle$-$\frac{\beta}{8}$ $|011111100\rangle$-$\frac{\beta}{8}$ $|011111110\rangle$- $\frac{\beta}{8}$ $|111000000\rangle$-$\frac{\beta}{8}$ $|111000010\rangle$-$\frac{\beta}{8}$ $|111000100\rangle$- $\frac{\beta}{8}$ $|111000110\rangle$-$\frac{\beta}{8}$ $|111001000\rangle$-$\frac{\beta}{8}$ $|111001010\rangle$-$\frac{\beta}{8}$ $|111001100\rangle$-$\frac{\beta}{8}$ $|111001110\rangle$+ $\frac{\beta}{8}$ $|101010000\rangle$+$\frac{\beta}{8}$ $|101010010\rangle$+$\frac{\beta}{8}$ $|101010100\rangle$+$\frac{\beta}{8}$ $|101010110\rangle$+ $\frac{\beta}{8}$ $|101011000\rangle$+$\frac{\beta}{8}$ $|101011010\rangle$+$\frac{\beta}{8}$ $|101011100\rangle$+$\frac{\beta}{8}$ $|101011110\rangle$.

- Porte H(9) :

$|\psi_3\rangle$ = $\frac{\alpha}{8\sqrt{2}}$ $|100000000\rangle$+$\frac{\alpha}{8\sqrt{2}}$ $|100000001\rangle$+$\frac{\alpha}{8\sqrt{2}}$ $|100000010\rangle$+$\frac{\alpha}{8\sqrt{2}}$ $|100000011\rangle$+ $\frac{\alpha}{8\sqrt{2}}$ $|100000100\rangle$+$\frac{\alpha}{8\sqrt{2}}$ $|100000101\rangle$+$\frac{\alpha}{8\sqrt{2}}$ $|100000110\rangle$+$\frac{\alpha}{8\sqrt{2}}$ $|100000111\rangle$+$\frac{\alpha}{8\sqrt{2}}$ $|100001000\rangle$+$\frac{\alpha}{8\sqrt{2}}$ $|100001001\rangle$+$\frac{\alpha}{8\sqrt{2}}$ $|100001010\rangle$+$\frac{\alpha}{8\sqrt{2}}$ $|100001011\rangle$+$\frac{\alpha}{8\sqrt{2}}$ $|100001100\rangle$+$\frac{\alpha}{8\sqrt{2}}$ $|100001101\rangle$+$\frac{\alpha}{8\sqrt{2}}$ $|100001110\rangle$+$\frac{\alpha}{8\sqrt{2}}$ $|100001111\rangle$+$\frac{\alpha}{8\sqrt{2}}$ $|110010000\rangle$+$\frac{\alpha}{8\sqrt{2}}$ $|110010001\rangle$+$\frac{\alpha}{8\sqrt{2}}$ $|110010010\rangle$+$\frac{\alpha}{8\sqrt{2}}$ $|110010011\rangle$+$\frac{\alpha}{8\sqrt{2}}$ $|110010100\rangle$+$\frac{\alpha}{8\sqrt{2}}$ $|110010101\rangle$+$\frac{\alpha}{8\sqrt{2}}$ $|110010110\rangle$+$\frac{\alpha}{8\sqrt{2}}$ $|110010111\rangle$+$\frac{\alpha}{8\sqrt{2}}$ $|110011000\rangle$+$\frac{\alpha}{8\sqrt{2}}$ $|110011001\rangle$+$\frac{\alpha}{8\sqrt{2}}$ $|110011010\rangle$+$\frac{\alpha}{8\sqrt{2}}$ $|110011011\rangle$+$\frac{\alpha}{8\sqrt{2}}$

$|110011100\rangle+\frac{\alpha}{8\sqrt{2}}$ $|110011101\rangle+\frac{\alpha}{8\sqrt{2}}$ $|110011110\rangle+\frac{\alpha}{8\sqrt{2}}$ $|110011111\rangle+\frac{\alpha}{8\sqrt{2}}$ $|010100000\rangle+\frac{\alpha}{8\sqrt{2}}$ $|010100001\rangle+\frac{\alpha}{8\sqrt{2}}$
$|010100010\rangle+\frac{\alpha}{8\sqrt{2}}$ $|010100011\rangle+\frac{\alpha}{8\sqrt{2}}$ $|010100100\rangle+\frac{\alpha}{8\sqrt{2}}$ $|010100101\rangle+\frac{\alpha}{8\sqrt{2}}$ $|010100110\rangle+\frac{\alpha}{8\sqrt{2}}$ $|010100111\rangle+\frac{\alpha}{8\sqrt{2}}$
$|010101000\rangle+\frac{\alpha}{8\sqrt{2}}$ $|010101001\rangle+\frac{\alpha}{8\sqrt{2}}$ $|010101010\rangle+\frac{\alpha}{8\sqrt{2}}$ $|010101011\rangle+\frac{\alpha}{8\sqrt{2}}$ $|010101100\rangle+\frac{\alpha}{8\sqrt{2}}$ $|010101101\rangle+\frac{\alpha}{8\sqrt{2}}$
$|010101110\rangle+\frac{\alpha}{8\sqrt{2}}$ $|010101111\rangle-\frac{\alpha}{8\sqrt{2}}$ $|000110000\rangle-\frac{\alpha}{8\sqrt{2}}$ $|000110001\rangle-\frac{\alpha}{8\sqrt{2}}$ $|000110010\rangle-\frac{\alpha}{8\sqrt{2}}$ $|000110011\rangle-\frac{\alpha}{8\sqrt{2}}$
$|000110100\rangle-\frac{\alpha}{8\sqrt{2}}$ $|000110101\rangle-\frac{\alpha}{8\sqrt{2}}$ $|000110110\rangle-\frac{\alpha}{8\sqrt{2}}$ $|000110111\rangle-\frac{\alpha}{8\sqrt{2}}$ $|000111000\rangle-\frac{\alpha}{8\sqrt{2}}$ $|000111001\rangle-\frac{\alpha}{8\sqrt{2}}$
$|000111010\rangle-\frac{\alpha}{8\sqrt{2}}$ $|000111011\rangle-\frac{\alpha}{8\sqrt{2}}$ $|000111100\rangle-\frac{\alpha}{8\sqrt{2}}$ $|000111101\rangle-\frac{\alpha}{8\sqrt{2}}$ $|000111110\rangle-\frac{\alpha}{8\sqrt{2}}$ $|000111111\rangle+\frac{\alpha}{8\sqrt{2}}$
$|111100000\rangle+\frac{\alpha}{8\sqrt{2}}$ $|111100001\rangle+\frac{\alpha}{8\sqrt{2}}$ $|111100010\rangle+\frac{\alpha}{8\sqrt{2}}$ $|111100011\rangle+\frac{\alpha}{8\sqrt{2}}$ $|111100100\rangle+\frac{\alpha}{8\sqrt{2}}$ $|111100101\rangle+\frac{\alpha}{8\sqrt{2}}$
$|111100110\rangle+\frac{\alpha}{8\sqrt{2}}$ $|111100111\rangle+\frac{\alpha}{8\sqrt{2}}$ $|111101000\rangle+\frac{\alpha}{8\sqrt{2}}$ $|111101001\rangle+\frac{\alpha}{8\sqrt{2}}$ $|111101010\rangle+\frac{\alpha}{8\sqrt{2}}$ $|111101011\rangle+\frac{\alpha}{8\sqrt{2}}$
$|111101100\rangle+\frac{\alpha}{8\sqrt{2}}$ $|111101101\rangle+\frac{\alpha}{8\sqrt{2}}$ $|111101110\rangle+\frac{\alpha}{8\sqrt{2}}$ $|111101111\rangle+\frac{\alpha}{8\sqrt{2}}$ $|101110000\rangle+\frac{\alpha}{8\sqrt{2}}$ $|101110001\rangle+\frac{\alpha}{8\sqrt{2}}$
$|101110010\rangle+\frac{\alpha}{8\sqrt{2}}$ $|101110011\rangle+\frac{\alpha}{8\sqrt{2}}$ $|101110100\rangle+\frac{\alpha}{8\sqrt{2}}$ $|101110101\rangle+\frac{\alpha}{8\sqrt{2}}$ $|101110110\rangle+\frac{\alpha}{8\sqrt{2}}$ $|101110111\rangle+\frac{\alpha}{8\sqrt{2}}$
$|101111000\rangle+\frac{\alpha}{8\sqrt{2}}$ $|101111001\rangle+\frac{\alpha}{8\sqrt{2}}$ $|101111010\rangle+\frac{\alpha}{8\sqrt{2}}$ $|101111011\rangle+\frac{\alpha}{8\sqrt{2}}$ $|101111100\rangle+\frac{\alpha}{8\sqrt{2}}$ $|101111101\rangle+\frac{\alpha}{8\sqrt{2}}$
$|101111110\rangle+\frac{\alpha}{8\sqrt{2}}$ $|101111111\rangle+\frac{\alpha}{8\sqrt{2}}$ $|001000000\rangle+\frac{\alpha}{8\sqrt{2}}$ $|001000001\rangle+\frac{\alpha}{8\sqrt{2}}$ $|001000010\rangle+\frac{\alpha}{8\sqrt{2}}$ $|001000011\rangle+\frac{\alpha}{8\sqrt{2}}$
$|001000100\rangle+\frac{\alpha}{8\sqrt{2}}$ $|001000101\rangle+\frac{\alpha}{8\sqrt{2}}$ $|001000110\rangle+\frac{\alpha}{8\sqrt{2}}$ $|001000111\rangle+\frac{\alpha}{8\sqrt{2}}$ $|001001000\rangle+\frac{\alpha}{8\sqrt{2}}$ $|001001001\rangle+\frac{\alpha}{8\sqrt{2}}$
$|001001010\rangle+\frac{\alpha}{8\sqrt{2}}$ $|001001011\rangle+\frac{\alpha}{8\sqrt{2}}$ $|001001100\rangle+\frac{\alpha}{8\sqrt{2}}$ $|001001101\rangle+\frac{\alpha}{8\sqrt{2}}$ $|001001110\rangle+\frac{\alpha}{8\sqrt{2}}$ $|001001111\rangle-\frac{\alpha}{8\sqrt{2}}$
$|011010000\rangle-\frac{\alpha}{8\sqrt{2}}$ $|011010001\rangle-\frac{\alpha}{8\sqrt{2}}$ $|011010010\rangle-\frac{\alpha}{8\sqrt{2}}$ $|011010011\rangle-\frac{\alpha}{8\sqrt{2}}$ $|011010100\rangle-\frac{\alpha}{8\sqrt{2}}$ $|011010101\rangle-\frac{\alpha}{8\sqrt{2}}$
$|011010110\rangle-\frac{\alpha}{8\sqrt{2}}$ $|011010111\rangle-\frac{\alpha}{8\sqrt{2}}$ $|011011000\rangle-\frac{\alpha}{8\sqrt{2}}$ $|011011001\rangle-\frac{\alpha}{8\sqrt{2}}$ $|011011010\rangle-\frac{\alpha}{8\sqrt{2}}$ $|011011011\rangle-\frac{\alpha}{8\sqrt{2}}$
$|011011100\rangle-\frac{\alpha}{8\sqrt{2}}$ $|011011101\rangle-\frac{\alpha}{8\sqrt{2}}$ $|011011110\rangle-\frac{\alpha}{8\sqrt{2}}$ $|011011111\rangle+\frac{\beta}{8\sqrt{2}}$ $|010000000\rangle+\frac{\beta}{8\sqrt{2}}$ $|010000001\rangle+\frac{\beta}{8\sqrt{2}}$
$|010000010\rangle+\frac{\beta}{8\sqrt{2}}$ $|010000011\rangle+\frac{\beta}{8\sqrt{2}}$ $|010000100\rangle+\frac{\beta}{8\sqrt{2}}$ $|010000101\rangle+\frac{\beta}{8\sqrt{2}}$ $|010000110\rangle+\frac{\beta}{8\sqrt{2}}$ $|010000111\rangle+\frac{\beta}{8\sqrt{2}}$
$|010001000\rangle+\frac{\beta}{8\sqrt{2}}$ $|010001001\rangle+\frac{\beta}{8\sqrt{2}}$ $|010001010\rangle+\frac{\beta}{8\sqrt{2}}$ $|010001011\rangle+\frac{\beta}{8\sqrt{2}}$ $|010001100\rangle+\frac{\beta}{8\sqrt{2}}$ $|010001101\rangle+\frac{\beta}{8\sqrt{2}}$
$|010001110\rangle+\frac{\beta}{8\sqrt{2}}$ $|010001111\rangle+\frac{\beta}{8\sqrt{2}}$ $|000010000\rangle+\frac{\beta}{8\sqrt{2}}$ $|000010001\rangle+\frac{\beta}{8\sqrt{2}}$ $|000010010\rangle+\frac{\beta}{8\sqrt{2}}$ $|000010011\rangle+\frac{\beta}{8\sqrt{2}}$
$|000010100\rangle+\frac{\beta}{8\sqrt{2}}$ $|000010101\rangle+\frac{\beta}{8\sqrt{2}}$ $|000010110\rangle+\frac{\beta}{8\sqrt{2}}$ $|000010111\rangle+\frac{\beta}{8\sqrt{2}}$ $|000011000\rangle+\frac{\beta}{8\sqrt{2}}$ $|000011001\rangle+\frac{\beta}{8\sqrt{2}}$
$|000011010\rangle+\frac{\beta}{8\sqrt{2}}$ $|000011011\rangle+\frac{\beta}{8\sqrt{2}}$ $|000011100\rangle+\frac{\beta}{8\sqrt{2}}$ $|000011101\rangle+\frac{\beta}{8\sqrt{2}}$ $|000011110\rangle+\frac{\beta}{8\sqrt{2}}$ $|000011111\rangle+\frac{\beta}{8\sqrt{2}}$
$|100100000\rangle+\frac{\beta}{8\sqrt{2}}$ $|100100001\rangle+\frac{\beta}{8\sqrt{2}}$ $|100100010\rangle+\frac{\beta}{8\sqrt{2}}$ $|100100011\rangle+\frac{\beta}{8\sqrt{2}}$ $|100100100\rangle+\frac{\beta}{8\sqrt{2}}$ $|100100101\rangle+\frac{\beta}{8\sqrt{2}}$
$|100100110\rangle+\frac{\beta}{8\sqrt{2}}$ $|100100111\rangle+\frac{\beta}{8\sqrt{2}}$ $|100101000\rangle+\frac{\beta}{8\sqrt{2}}$ $|100101001\rangle+\frac{\beta}{8\sqrt{2}}$ $|100101010\rangle+\frac{\beta}{8\sqrt{2}}$ $|100101011\rangle+\frac{\beta}{8\sqrt{2}}$
$|100101100\rangle+\frac{\beta}{8\sqrt{2}}$ $|100101101\rangle+\frac{\beta}{8\sqrt{2}}$ $|100101110\rangle+\frac{\beta}{8\sqrt{2}}$ $|100101111\rangle-\frac{\beta}{8\sqrt{2}}$ $|110110000\rangle-\frac{\beta}{8\sqrt{2}}$ $|110110001\rangle-\frac{\beta}{8\sqrt{2}}$
$|110110010\rangle-\frac{\beta}{8\sqrt{2}}$ $|110110011\rangle-\frac{\beta}{8\sqrt{2}}$ $|110110100\rangle-\frac{\beta}{8\sqrt{2}}$ $|110110101\rangle-\frac{\beta}{8\sqrt{2}}$ $|110110110\rangle-\frac{\beta}{8\sqrt{2}}$ $|110110111\rangle-\frac{\beta}{8\sqrt{2}}$
$|110111000\rangle-\frac{\beta}{8\sqrt{2}}$ $|110111001\rangle-\frac{\beta}{8\sqrt{2}}$ $|110111010\rangle-\frac{\beta}{8\sqrt{2}}$ $|110111011\rangle-\frac{\beta}{8\sqrt{2}}$ $|110111100\rangle-\frac{\beta}{8\sqrt{2}}$ $|110111101\rangle-\frac{\beta}{8\sqrt{2}}$
$|110111110\rangle-\frac{\beta}{8\sqrt{2}}$ $|110111111\rangle-\frac{\beta}{8\sqrt{2}}$ $|001100000\rangle-\frac{\beta}{8\sqrt{2}}$ $|001100001\rangle-\frac{\beta}{8\sqrt{2}}$ $|001100010\rangle-\frac{\beta}{8\sqrt{2}}$ $|001100011\rangle-\frac{\beta}{8\sqrt{2}}$
$|001100100\rangle-\frac{\beta}{8\sqrt{2}}$ $|001100101\rangle-\frac{\beta}{8\sqrt{2}}$ $|001100110\rangle-\frac{\beta}{8\sqrt{2}}$ $|001100111\rangle-\frac{\beta}{8\sqrt{2}}$ $|001101000\rangle-\frac{\beta}{8\sqrt{2}}$ $|001101001\rangle-\frac{\beta}{8\sqrt{2}}$
$|001101010\rangle-\frac{\beta}{8\sqrt{2}}$ $|001101011\rangle-\frac{\beta}{8\sqrt{2}}$ $|001101100\rangle-\frac{\beta}{8\sqrt{2}}$ $|001101101\rangle-\frac{\beta}{8\sqrt{2}}$ $|001101110\rangle-\frac{\beta}{8\sqrt{2}}$ $|001101111\rangle-\frac{\beta}{8\sqrt{2}}$
$|011110000\rangle-\frac{\beta}{8\sqrt{2}}$ $|011110001\rangle-\frac{\beta}{8\sqrt{2}}$ $|011110010\rangle-\frac{\beta}{8\sqrt{2}}$ $|011110011\rangle-\frac{\beta}{8\sqrt{2}}$ $|011110100\rangle-\frac{\beta}{8\sqrt{2}}$ $|011110101\rangle-\frac{\beta}{8\sqrt{2}}$
$|011110110\rangle-\frac{\beta}{8\sqrt{2}}$ $|011110111\rangle-\frac{\beta}{8\sqrt{2}}$ $|011111000\rangle-\frac{\beta}{8\sqrt{2}}$ $|011111001\rangle-\frac{\beta}{8\sqrt{2}}$ $|011111010\rangle-\frac{\beta}{8\sqrt{2}}$ $|011111011\rangle-\frac{\beta}{8\sqrt{2}}$
$|011111100\rangle-\frac{\beta}{8\sqrt{2}}$ $|011111101\rangle-\frac{\beta}{8\sqrt{2}}$ $|011111110\rangle-\frac{\beta}{8\sqrt{2}}$ $|011111111\rangle-\frac{\beta}{8\sqrt{2}}$ $|111000000\rangle-\frac{\beta}{8\sqrt{2}}$ $|111000001\rangle-\frac{\beta}{8\sqrt{2}}$
$|111000010\rangle-\frac{\beta}{8\sqrt{2}}$ $|111000011\rangle-\frac{\beta}{8\sqrt{2}}$ $|111000100\rangle-\frac{\beta}{8\sqrt{2}}$ $|111000101\rangle-\frac{\beta}{8\sqrt{2}}$ $|111000110\rangle-\frac{\beta}{8\sqrt{2}}$ $|111000111\rangle-\frac{\beta}{8\sqrt{2}}$
$|111001000\rangle-\frac{\beta}{8\sqrt{2}}$ $|111001001\rangle-\frac{\beta}{8\sqrt{2}}$ $|111001010\rangle-\frac{\beta}{8\sqrt{2}}$ $|111001011\rangle-\frac{\beta}{8\sqrt{2}}$ $|111001100\rangle-\frac{\beta}{8\sqrt{2}}$ $|111001101\rangle-\frac{\beta}{8\sqrt{2}}$
$|111001110\rangle-\frac{\beta}{8\sqrt{2}}$ $|111001111\rangle+\frac{\beta}{8\sqrt{2}}$ $|101010000\rangle+\frac{\beta}{8\sqrt{2}}$ $|101010001\rangle+\frac{\beta}{8\sqrt{2}}$ $|101010010\rangle+\frac{\beta}{8\sqrt{2}}$ $|101010011\rangle+\frac{\beta}{8\sqrt{2}}$
$|101010100\rangle+\frac{\beta}{8\sqrt{2}}$ $|101010101\rangle+\frac{\beta}{8\sqrt{2}}$ $|101010110\rangle+\frac{\beta}{8\sqrt{2}}$ $|101010111\rangle+\frac{\beta}{8\sqrt{2}}$ $|101011000\rangle+\frac{\beta}{8\sqrt{2}}$ $|101011001\rangle+\frac{\beta}{8\sqrt{2}}$
$|101011010\rangle+\frac{\beta}{8\sqrt{2}}$ $|101011011\rangle+\frac{\beta}{8\sqrt{2}}$ $|101011100\rangle+\frac{\beta}{8\sqrt{2}}$ $|101011101\rangle+\frac{\beta}{8\sqrt{2}}$ $|101011110\rangle+\frac{\beta}{8\sqrt{2}}$ $|101011111\rangle$.

- Application contrôlée des stabilisateurs :

✓ M_0 :

- Porte X(1):

$|\psi_3\rangle = \frac{\alpha}{8\sqrt{2}}|100000000\rangle + \frac{\alpha}{8\sqrt{2}}|100000001\rangle + \frac{\alpha}{8\sqrt{2}}|100000010\rangle + \frac{\alpha}{8\sqrt{2}}|100000011\rangle + \frac{\alpha}{8\sqrt{2}}|100000100\rangle + \frac{\alpha}{8\sqrt{2}}$
$|100000101\rangle + \frac{\alpha}{8\sqrt{2}}|100000110\rangle + \frac{\alpha}{8\sqrt{2}}|100000111\rangle + \frac{\alpha}{8\sqrt{2}}|000001000\rangle + \frac{\alpha}{8\sqrt{2}}|000001001\rangle + \frac{\alpha}{8\sqrt{2}}|000001010\rangle + \frac{\alpha}{8\sqrt{2}}$
$|000001011\rangle + \frac{\alpha}{8\sqrt{2}}|000001100\rangle + \frac{\alpha}{8\sqrt{2}}|000001101\rangle + \frac{\alpha}{8\sqrt{2}}|000001110\rangle + \frac{\alpha}{8\sqrt{2}}|000001111\rangle + \frac{\alpha}{8\sqrt{2}}|110010000\rangle + \frac{\alpha}{8\sqrt{2}}$
$|110010001\rangle + \frac{\alpha}{8\sqrt{2}}|110010010\rangle + \frac{\alpha}{8\sqrt{2}}|110010011\rangle + \frac{\alpha}{8\sqrt{2}}|110010100\rangle + \frac{\alpha}{8\sqrt{2}}|110010101\rangle + \frac{\alpha}{8\sqrt{2}}|110010110\rangle + \frac{\alpha}{8\sqrt{2}}$
$|110010111\rangle + \frac{\alpha}{8\sqrt{2}}|010011000\rangle + \frac{\alpha}{8\sqrt{2}}|010011001\rangle + \frac{\alpha}{8\sqrt{2}}|010011010\rangle + \frac{\alpha}{8\sqrt{2}}|010011011\rangle + \frac{\alpha}{8\sqrt{2}}|010011100\rangle + \frac{\alpha}{8\sqrt{2}}$
$|010011101\rangle + \frac{\alpha}{8\sqrt{2}}|010011110\rangle + \frac{\alpha}{8\sqrt{2}}|010011111\rangle + \frac{\alpha}{8\sqrt{2}}|010100000\rangle + \frac{\alpha}{8\sqrt{2}}|010100001\rangle + \frac{\alpha}{8\sqrt{2}}|010100010\rangle + \frac{\alpha}{8\sqrt{2}}$
$|010100011\rangle + \frac{\alpha}{8\sqrt{2}}|010100100\rangle + \frac{\alpha}{8\sqrt{2}}|010100101\rangle + \frac{\alpha}{8\sqrt{2}}|010100110\rangle + \frac{\alpha}{8\sqrt{2}}|010100111\rangle + \frac{\alpha}{8\sqrt{2}}|110101000\rangle + \frac{\alpha}{8\sqrt{2}}$
$|110101001\rangle + \frac{\alpha}{8\sqrt{2}}|110101010\rangle + \frac{\alpha}{8\sqrt{2}}|110101011\rangle + \frac{\alpha}{8\sqrt{2}}|110101100\rangle + \frac{\alpha}{8\sqrt{2}}|110101101\rangle + \frac{\alpha}{8\sqrt{2}}|110101110\rangle + \frac{\alpha}{8\sqrt{2}}$
$|110101111\rangle - \frac{\alpha}{8\sqrt{2}}|000110000\rangle - \frac{\alpha}{8\sqrt{2}}|000110001\rangle - \frac{\alpha}{8\sqrt{2}}|000110010\rangle - \frac{\alpha}{8\sqrt{2}}|000110011\rangle - \frac{\alpha}{8\sqrt{2}}|000110100\rangle - \frac{\alpha}{8\sqrt{2}}$
$|000110101\rangle - \frac{\alpha}{8\sqrt{2}}|000110110\rangle - \frac{\alpha}{8\sqrt{2}}|000110111\rangle - \frac{\alpha}{8\sqrt{2}}|100111000\rangle - \frac{\alpha}{8\sqrt{2}}|100111001\rangle - \frac{\alpha}{8\sqrt{2}}|100111010\rangle - \frac{\alpha}{8\sqrt{2}}$
$|100111011\rangle - \frac{\alpha}{8\sqrt{2}}|100111100\rangle - \frac{\alpha}{8\sqrt{2}}|100111101\rangle - \frac{\alpha}{8\sqrt{2}}|100111110\rangle - \frac{\alpha}{8\sqrt{2}}|100111111\rangle + \frac{\alpha}{8\sqrt{2}}|111100000\rangle + \frac{\alpha}{8\sqrt{2}}$
$|111100001\rangle + \frac{\alpha}{8\sqrt{2}}|111100010\rangle + \frac{\alpha}{8\sqrt{2}}|111100011\rangle + \frac{\alpha}{8\sqrt{2}}|111100100\rangle + \frac{\alpha}{8\sqrt{2}}|111100101\rangle + \frac{\alpha}{8\sqrt{2}}|111100110\rangle + \frac{\alpha}{8\sqrt{2}}$
$|111100111\rangle + \frac{\alpha}{8\sqrt{2}}|011101000\rangle + \frac{\alpha}{8\sqrt{2}}|011101001\rangle + \frac{\alpha}{8\sqrt{2}}|011101010\rangle + \frac{\alpha}{8\sqrt{2}}|011101011\rangle + \frac{\alpha}{8\sqrt{2}}|011101100\rangle + \frac{\alpha}{8\sqrt{2}}$
$|011101101\rangle + \frac{\alpha}{8\sqrt{2}}|011101110\rangle + \frac{\alpha}{8\sqrt{2}}|011101111\rangle + \frac{\alpha}{8\sqrt{2}}|101110000\rangle + \frac{\alpha}{8\sqrt{2}}|101110001\rangle + \frac{\alpha}{8\sqrt{2}}|101110010\rangle + \frac{\alpha}{8\sqrt{2}}$
$|101110011\rangle + \frac{\alpha}{8\sqrt{2}}|101110100\rangle + \frac{\alpha}{8\sqrt{2}}|101110101\rangle + \frac{\alpha}{8\sqrt{2}}|101110110\rangle + \frac{\alpha}{8\sqrt{2}}|101110111\rangle + \frac{\alpha}{8\sqrt{2}}|001111000\rangle + \frac{\alpha}{8\sqrt{2}}$
$|001111001\rangle + \frac{\alpha}{8\sqrt{2}}|001111010\rangle + \frac{\alpha}{8\sqrt{2}}|001111011\rangle + \frac{\alpha}{8\sqrt{2}}|001111100\rangle + \frac{\alpha}{8\sqrt{2}}|001111101\rangle + \frac{\alpha}{8\sqrt{2}}|001111110\rangle + \frac{\alpha}{8\sqrt{2}}$
$|001111111\rangle + \frac{\alpha}{8\sqrt{2}}|001000000\rangle + \frac{\alpha}{8\sqrt{2}}|001000001\rangle + \frac{\alpha}{8\sqrt{2}}|001000010\rangle + \frac{\alpha}{8\sqrt{2}}|001000011\rangle + \frac{\alpha}{8\sqrt{2}}|001000100\rangle + \frac{\alpha}{8\sqrt{2}}$
$|001000101\rangle + \frac{\alpha}{8\sqrt{2}}|001000110\rangle + \frac{\alpha}{8\sqrt{2}}|001000111\rangle + \frac{\alpha}{8\sqrt{2}}|101001000\rangle + \frac{\alpha}{8\sqrt{2}}|101001001\rangle + \frac{\alpha}{8\sqrt{2}}|101001010\rangle + \frac{\alpha}{8\sqrt{2}}$
$|101001011\rangle + \frac{\alpha}{8\sqrt{2}}|101001100\rangle + \frac{\alpha}{8\sqrt{2}}|101001101\rangle + \frac{\alpha}{8\sqrt{2}}|101001110\rangle + \frac{\alpha}{8\sqrt{2}}|101001111\rangle - \frac{\alpha}{8\sqrt{2}}|011010000\rangle - \frac{\alpha}{8\sqrt{2}}$
$|011010001\rangle - \frac{\alpha}{8\sqrt{2}}|011010010\rangle - \frac{\alpha}{8\sqrt{2}}|011010011\rangle - \frac{\alpha}{8\sqrt{2}}|011010100\rangle - \frac{\alpha}{8\sqrt{2}}|011010101\rangle - \frac{\alpha}{8\sqrt{2}}|011010110\rangle - \frac{\alpha}{8\sqrt{2}}$
$|011010111\rangle - \frac{\alpha}{8\sqrt{2}}|111011000\rangle - \frac{\alpha}{8\sqrt{2}}|111011001\rangle - \frac{\alpha}{8\sqrt{2}}|111011010\rangle - \frac{\alpha}{8\sqrt{2}}|111011011\rangle - \frac{\alpha}{8\sqrt{2}}|111011100\rangle - \frac{\alpha}{8\sqrt{2}}$
$|111011101\rangle - \frac{\alpha}{8\sqrt{2}}|111011110\rangle - \frac{\alpha}{8\sqrt{2}}|111011111\rangle + \frac{\beta}{8\sqrt{2}}|010000000\rangle + \frac{\beta}{8\sqrt{2}}|010000001\rangle + \frac{\beta}{8\sqrt{2}}|010000010\rangle + \frac{\beta}{8\sqrt{2}}$
$|010000011\rangle + \frac{\beta}{8\sqrt{2}}|010000100\rangle + \frac{\beta}{8\sqrt{2}}|010000101\rangle + \frac{\beta}{8\sqrt{2}}|010000110\rangle + \frac{\beta}{8\sqrt{2}}|010000111\rangle + \frac{\beta}{8\sqrt{2}}|110001000\rangle + \frac{\beta}{8\sqrt{2}}$
$|110001001\rangle + \frac{\beta}{8\sqrt{2}}|110001010\rangle + \frac{\beta}{8\sqrt{2}}|110001011\rangle + \frac{\beta}{8\sqrt{2}}|110001100\rangle + \frac{\beta}{8\sqrt{2}}|110001101\rangle + \frac{\beta}{8\sqrt{2}}|110001110\rangle + \frac{\beta}{8\sqrt{2}}$
$|110001111\rangle + \frac{\beta}{8\sqrt{2}}|000010000\rangle + \frac{\beta}{8\sqrt{2}}|000010001\rangle + \frac{\beta}{8\sqrt{2}}|000010010\rangle + \frac{\beta}{8\sqrt{2}}|000010011\rangle + \frac{\beta}{8\sqrt{2}}|000010100\rangle + \frac{\beta}{8\sqrt{2}}$
$|000010101\rangle + \frac{\beta}{8\sqrt{2}}|000010110\rangle + \frac{\beta}{8\sqrt{2}}|000010111\rangle + \frac{\beta}{8\sqrt{2}}|100011000\rangle + \frac{\beta}{8\sqrt{2}}|100011001\rangle + \frac{\beta}{8\sqrt{2}}|100011010\rangle + \frac{\beta}{8\sqrt{2}}$
$|100011011\rangle + \frac{\beta}{8\sqrt{2}}|100011100\rangle + \frac{\beta}{8\sqrt{2}}|100011101\rangle + \frac{\beta}{8\sqrt{2}}|100011110\rangle + \frac{\beta}{8\sqrt{2}}|100011111\rangle + \frac{\beta}{8\sqrt{2}}|100100000\rangle + \frac{\beta}{8\sqrt{2}}$
$|100100001\rangle + \frac{\beta}{8\sqrt{2}}|100100010\rangle + \frac{\beta}{8\sqrt{2}}|100100011\rangle + \frac{\beta}{8\sqrt{2}}|100100100\rangle + \frac{\beta}{8\sqrt{2}}|100100101\rangle + \frac{\beta}{8\sqrt{2}}|100100110\rangle + \frac{\beta}{8\sqrt{2}}$
$|100100111\rangle + \frac{\beta}{8\sqrt{2}}|000101000\rangle + \frac{\beta}{8\sqrt{2}}|000101001\rangle + \frac{\beta}{8\sqrt{2}}|000101010\rangle + \frac{\beta}{8\sqrt{2}}|000101011\rangle + \frac{\beta}{8\sqrt{2}}|000101100\rangle + \frac{\beta}{8\sqrt{2}}$
$|000101101\rangle + \frac{\beta}{8\sqrt{2}}|000101110\rangle + \frac{\beta}{8\sqrt{2}}|000101111\rangle - \frac{\beta}{8\sqrt{2}}|110110000\rangle - \frac{\beta}{8\sqrt{2}}|110110001\rangle - \frac{\beta}{8\sqrt{2}}|110110010\rangle - \frac{\beta}{8\sqrt{2}}$
$|110110011\rangle - \frac{\beta}{8\sqrt{2}}|110110100\rangle - \frac{\beta}{8\sqrt{2}}|110110101\rangle - \frac{\beta}{8\sqrt{2}}|110110110\rangle - \frac{\beta}{8\sqrt{2}}|110110111\rangle - \frac{\beta}{8\sqrt{2}}|010111000\rangle - \frac{\beta}{8\sqrt{2}}$
$|010111001\rangle - \frac{\beta}{8\sqrt{2}}|010111010\rangle - \frac{\beta}{8\sqrt{2}}|010111011\rangle - \frac{\beta}{8\sqrt{2}}|010111100\rangle - \frac{\beta}{8\sqrt{2}}|010111101\rangle - \frac{\beta}{8\sqrt{2}}|010111110\rangle - \frac{\beta}{8\sqrt{2}}$
$|010111111\rangle - \frac{\beta}{8\sqrt{2}}|001100000\rangle - \frac{\beta}{8\sqrt{2}}|001100001\rangle - \frac{\beta}{8\sqrt{2}}|001100010\rangle - \frac{\beta}{8\sqrt{2}}|001100011\rangle - \frac{\beta}{8\sqrt{2}}|001100100\rangle - \frac{\beta}{8\sqrt{2}}$
$|001100101\rangle - \frac{\beta}{8\sqrt{2}}|001100110\rangle - \frac{\beta}{8\sqrt{2}}|001100111\rangle - \frac{\beta}{8\sqrt{2}}|101101000\rangle - \frac{\beta}{8\sqrt{2}}|101101001\rangle - \frac{\beta}{8\sqrt{2}}|101101010\rangle - \frac{\beta}{8\sqrt{2}}$

$|101101011\rangle - \frac{\beta}{8\sqrt{2}}\ |101101100\rangle - \frac{\beta}{8\sqrt{2}}\ |101101101\rangle - \frac{\beta}{8\sqrt{2}}\ |101101110\rangle - \frac{\beta}{8\sqrt{2}}\ |101101111\rangle - \frac{\beta}{8\sqrt{2}}\ |011110000\rangle - \frac{\beta}{8\sqrt{2}}$
$|011110001\rangle - \frac{\beta}{8\sqrt{2}}\ |011110010\rangle - \frac{\beta}{8\sqrt{2}}\ |011110011\rangle - \frac{\beta}{8\sqrt{2}}\ |011110100\rangle - \frac{\beta}{8\sqrt{2}}\ |011110101\rangle - \frac{\beta}{8\sqrt{2}}\ |011110110\rangle - \frac{\beta}{8\sqrt{2}}$
$|011110111\rangle - \frac{\beta}{8\sqrt{2}}\ |111111000\rangle - \frac{\beta}{8\sqrt{2}}\ |111111001\rangle - \frac{\beta}{8\sqrt{2}}\ |111111010\rangle - \frac{\beta}{8\sqrt{2}}\ |111111011\rangle - \frac{\beta}{8\sqrt{2}}\ |111111100\rangle - \frac{\beta}{8\sqrt{2}}$
$|111111101\rangle - \frac{\beta}{8\sqrt{2}}\ |111111110\rangle - \frac{\beta}{8\sqrt{2}}\ |111111111\rangle - \frac{\beta}{8\sqrt{2}}\ |111000000\rangle - \frac{\beta}{8\sqrt{2}}\ |111000001\rangle - \frac{\beta}{8\sqrt{2}}\ |111000010\rangle - \frac{\beta}{8\sqrt{2}}$
$|111000011\rangle - \frac{\beta}{8\sqrt{2}}\ |111000100\rangle - \frac{\beta}{8\sqrt{2}}\ |111000101\rangle - \frac{\beta}{8\sqrt{2}}\ |111000110\rangle - \frac{\beta}{8\sqrt{2}}\ |111000111\rangle - \frac{\beta}{8\sqrt{2}}\ |011001000\rangle - \frac{\beta}{8\sqrt{2}}$
$|011001001\rangle - \frac{\beta}{8\sqrt{2}}\ |011001010\rangle - \frac{\beta}{8\sqrt{2}}\ |011001011\rangle - \frac{\beta}{8\sqrt{2}}\ |011001100\rangle - \frac{\beta}{8\sqrt{2}}\ |011001101\rangle - \frac{\beta}{8\sqrt{2}}\ |011001110\rangle - \frac{\beta}{8\sqrt{2}}$
$|011001111\rangle + \frac{\beta}{8\sqrt{2}}\ |101010000\rangle + \frac{\beta}{8\sqrt{2}}\ |101010001\rangle + \frac{\beta}{8\sqrt{2}}\ |101010010\rangle + \frac{\beta}{8\sqrt{2}}\ |101010011\rangle + \frac{\beta}{8\sqrt{2}}\ |101010100\rangle + \frac{\beta}{8\sqrt{2}}$
$|101010101\rangle + \frac{\beta}{8\sqrt{2}}\ |101010110\rangle + \frac{\beta}{8\sqrt{2}}\ |101010111\rangle + \frac{\beta}{8\sqrt{2}}\ |001011000\rangle + \frac{\beta}{8\sqrt{2}}\ |001011001\rangle + \frac{\beta}{8\sqrt{2}}\ |001011010\rangle + \frac{\beta}{8\sqrt{2}}$
$|001011011\rangle + \frac{\beta}{8\sqrt{2}}\ |001011100\rangle + \frac{\beta}{8\sqrt{2}}\ |001011101\rangle + \frac{\beta}{8\sqrt{2}}\ |001011110\rangle + \frac{\beta}{8\sqrt{2}}\ |001011111\rangle.$

- Porte Z(2) :

$|\ \psi_3\ \rangle = \frac{\alpha}{8\sqrt{2}}\ |100000000\rangle + \frac{\alpha}{8\sqrt{2}}\ |100000001\rangle + \frac{\alpha}{8\sqrt{2}}\ |100000010\rangle + \frac{\alpha}{8\sqrt{2}}\ |100000011\rangle + \frac{\alpha}{8\sqrt{2}}\ |100000100\rangle + \frac{\alpha}{8\sqrt{2}}$
$|100000101\rangle + \frac{\alpha}{8\sqrt{2}}\ |100000110\rangle + \frac{\alpha}{8\sqrt{2}}\ |100000111\rangle + \frac{\alpha}{8\sqrt{2}}\ |000001000\rangle + \frac{\alpha}{8\sqrt{2}}\ |000001001\rangle + \frac{\alpha}{8\sqrt{2}}\ |000001010\rangle + \frac{\alpha}{8\sqrt{2}}$
$|000001011\rangle + \frac{\alpha}{8\sqrt{2}}\ |000001100\rangle + \frac{\alpha}{8\sqrt{2}}\ |000001101\rangle + \frac{\alpha}{8\sqrt{2}}\ |000001110\rangle + \frac{\alpha}{8\sqrt{2}}\ |000001111\rangle + \frac{\alpha}{8\sqrt{2}}\ |110010000\rangle + \frac{\alpha}{8\sqrt{2}}$
$|110010001\rangle + \frac{\alpha}{8\sqrt{2}}\ |110010010\rangle + \frac{\alpha}{8\sqrt{2}}\ |110010011\rangle + \frac{\alpha}{8\sqrt{2}}\ |110010100\rangle + \frac{\alpha}{8\sqrt{2}}\ |110010101\rangle + \frac{\alpha}{8\sqrt{2}}\ |110010110\rangle + \frac{\alpha}{8\sqrt{2}}$
$|110010111\rangle - \frac{\alpha}{8\sqrt{2}}\ |010011000\rangle - \frac{\alpha}{8\sqrt{2}}\ |010011001\rangle - \frac{\alpha}{8\sqrt{2}}\ |010011010\rangle - \frac{\alpha}{8\sqrt{2}}\ |010011011\rangle - \frac{\alpha}{8\sqrt{2}}\ |010011100\rangle - \frac{\alpha}{8\sqrt{2}}$
$|010011101\rangle - \frac{\alpha}{8\sqrt{2}}\ |010011110\rangle - \frac{\alpha}{8\sqrt{2}}\ |010011111\rangle + \frac{\alpha}{8\sqrt{2}}\ |010100000\rangle + \frac{\alpha}{8\sqrt{2}}\ |010100001\rangle + \frac{\alpha}{8\sqrt{2}}\ |010100010\rangle + \frac{\alpha}{8\sqrt{2}}$
$|010100011\rangle + \frac{\alpha}{8\sqrt{2}}\ |010100100\rangle + \frac{\alpha}{8\sqrt{2}}\ |010100101\rangle + \frac{\alpha}{8\sqrt{2}}\ |010100110\rangle + \frac{\alpha}{8\sqrt{2}}\ |010100111\rangle - \frac{\alpha}{8\sqrt{2}}\ |110101000\rangle - \frac{\alpha}{8\sqrt{2}}$
$|110101001\rangle - \frac{\alpha}{8\sqrt{2}}\ |110101010\rangle - \frac{\alpha}{8\sqrt{2}}\ |110101011\rangle - \frac{\alpha}{8\sqrt{2}}\ |110101100\rangle - \frac{\alpha}{8\sqrt{2}}\ |110101101\rangle - \frac{\alpha}{8\sqrt{2}}\ |110101110\rangle - \frac{\alpha}{8\sqrt{2}}$
$|110101111\rangle - \frac{\alpha}{8\sqrt{2}}\ |000110000\rangle - \frac{\alpha}{8\sqrt{2}}\ |000110001\rangle - \frac{\alpha}{8\sqrt{2}}\ |000110010\rangle - \frac{\alpha}{8\sqrt{2}}\ |000110011\rangle - \frac{\alpha}{8\sqrt{2}}\ |000110100\rangle - \frac{\alpha}{8\sqrt{2}}$
$|000110101\rangle - \frac{\alpha}{8\sqrt{2}}\ |000110110\rangle - \frac{\alpha}{8\sqrt{2}}\ |000110111\rangle - \frac{\alpha}{8\sqrt{2}}\ |100111000\rangle - \frac{\alpha}{8\sqrt{2}}\ |100111001\rangle - \frac{\alpha}{8\sqrt{2}}\ |100111010\rangle - \frac{\alpha}{8\sqrt{2}}$
$|100111011\rangle - \frac{\alpha}{8\sqrt{2}}\ |100111100\rangle - \frac{\alpha}{8\sqrt{2}}\ |100111101\rangle - \frac{\alpha}{8\sqrt{2}}\ |100111110\rangle - \frac{\alpha}{8\sqrt{2}}\ |100111111\rangle + \frac{\alpha}{8\sqrt{2}}\ |111100000\rangle + \frac{\alpha}{8\sqrt{2}}$
$|111100001\rangle + \frac{\alpha}{8\sqrt{2}}\ |111100010\rangle + \frac{\alpha}{8\sqrt{2}}\ |111100011\rangle + \frac{\alpha}{8\sqrt{2}}\ |111100100\rangle + \frac{\alpha}{8\sqrt{2}}\ |111100101\rangle + \frac{\alpha}{8\sqrt{2}}\ |111100110\rangle + \frac{\alpha}{8\sqrt{2}}$
$|111100111\rangle - \frac{\alpha}{8\sqrt{2}}\ |011101000\rangle - \frac{\alpha}{8\sqrt{2}}\ |011101001\rangle - \frac{\alpha}{8\sqrt{2}}\ |011101010\rangle - \frac{\alpha}{8\sqrt{2}}\ |011101011\rangle - \frac{\alpha}{8\sqrt{2}}\ |011101100\rangle - \frac{\alpha}{8\sqrt{2}}$
$|011101101\rangle - \frac{\alpha}{8\sqrt{2}}\ |011101110\rangle - \frac{\alpha}{8\sqrt{2}}\ |011101111\rangle + \frac{\alpha}{8\sqrt{2}}\ |101110000\rangle + \frac{\alpha}{8\sqrt{2}}\ |101110001\rangle + \frac{\alpha}{8\sqrt{2}}\ |101110010\rangle + \frac{\alpha}{8\sqrt{2}}$
$|101110011\rangle + \frac{\alpha}{8\sqrt{2}}\ |101110100\rangle + \frac{\alpha}{8\sqrt{2}}\ |101110101\rangle + \frac{\alpha}{8\sqrt{2}}\ |101110110\rangle + \frac{\alpha}{8\sqrt{2}}\ |101110111\rangle + \frac{\alpha}{8\sqrt{2}}\ |001111000\rangle + \frac{\alpha}{8\sqrt{2}}$
$|001111001\rangle + \frac{\alpha}{8\sqrt{2}}\ |001111010\rangle + \frac{\alpha}{8\sqrt{2}}\ |001111011\rangle + \frac{\alpha}{8\sqrt{2}}\ |001111100\rangle + \frac{\alpha}{8\sqrt{2}}\ |001111101\rangle + \frac{\alpha}{8\sqrt{2}}\ |001111110\rangle + \frac{\alpha}{8\sqrt{2}}$
$|001111111\rangle + \frac{\alpha}{8\sqrt{2}}\ |001000000\rangle + \frac{\alpha}{8\sqrt{2}}\ |001000001\rangle + \frac{\alpha}{8\sqrt{2}}\ |001000010\rangle + \frac{\alpha}{8\sqrt{2}}\ |001000011\rangle + \frac{\alpha}{8\sqrt{2}}\ |001000100\rangle + \frac{\alpha}{8\sqrt{2}}$
$|001000101\rangle + \frac{\alpha}{8\sqrt{2}}\ |001000110\rangle + \frac{\alpha}{8\sqrt{2}}\ |001000111\rangle + \frac{\alpha}{8\sqrt{2}}\ |101001000\rangle + \frac{\alpha}{8\sqrt{2}}\ |101001001\rangle + \frac{\alpha}{8\sqrt{2}}\ |101001010\rangle + \frac{\alpha}{8\sqrt{2}}$
$|101001011\rangle + \frac{\alpha}{8\sqrt{2}}\ |101001100\rangle + \frac{\alpha}{8\sqrt{2}}\ |101001101\rangle + \frac{\alpha}{8\sqrt{2}}\ |101001110\rangle + \frac{\alpha}{8\sqrt{2}}\ |101001111\rangle - \frac{\alpha}{8\sqrt{2}}\ |011010000\rangle - \frac{\alpha}{8\sqrt{2}}$
$|011010001\rangle - \frac{\alpha}{8\sqrt{2}}\ |011010010\rangle - \frac{\alpha}{8\sqrt{2}}\ |011010011\rangle - \frac{\alpha}{8\sqrt{2}}\ |011010100\rangle - \frac{\alpha}{8\sqrt{2}}\ |011010101\rangle - \frac{\alpha}{8\sqrt{2}}\ |011010110\rangle - \frac{\alpha}{8\sqrt{2}}$
$|011010111\rangle + \frac{\alpha}{8\sqrt{2}}\ |111011000\rangle + \frac{\alpha}{8\sqrt{2}}\ |111011001\rangle + \frac{\alpha}{8\sqrt{2}}\ |111011010\rangle + \frac{\alpha}{8\sqrt{2}}\ |111011011\rangle + \frac{\alpha}{8\sqrt{2}}\ |111011100\rangle + \frac{\alpha}{8\sqrt{2}}$
$|111011101\rangle + \frac{\alpha}{8\sqrt{2}}\ |111011110\rangle + \frac{\alpha}{8\sqrt{2}}\ |111011111\rangle + \frac{\beta}{8\sqrt{2}}\ |010000000\rangle + \frac{\beta}{8\sqrt{2}}\ |010000001\rangle + \frac{\beta}{8\sqrt{2}}\ |010000010\rangle + \frac{\beta}{8\sqrt{2}}$
$|010000011\rangle + \frac{\beta}{8\sqrt{2}}\ |010000100\rangle + \frac{\beta}{8\sqrt{2}}\ |010000101\rangle + \frac{\beta}{8\sqrt{2}}\ |010000110\rangle + \frac{\beta}{8\sqrt{2}}\ |010000111\rangle - \frac{\beta}{8\sqrt{2}}\ |110001000\rangle - \frac{\beta}{8\sqrt{2}}$
$|110001001\rangle - \frac{\beta}{8\sqrt{2}}\ |110001010\rangle - \frac{\beta}{8\sqrt{2}}\ |110001011\rangle - \frac{\beta}{8\sqrt{2}}\ |110001100\rangle - \frac{\beta}{8\sqrt{2}}\ |110001101\rangle - \frac{\beta}{8\sqrt{2}}\ |110001110\rangle - \frac{\beta}{8\sqrt{2}}$
$|110001111\rangle + \frac{\beta}{8\sqrt{2}}\ |000010000\rangle + \frac{\beta}{8\sqrt{2}}\ |000010001\rangle + \frac{\beta}{8\sqrt{2}}\ |000010010\rangle + \frac{\beta}{8\sqrt{2}}\ |000010011\rangle + \frac{\beta}{8\sqrt{2}}\ |000010100\rangle + \frac{\beta}{8\sqrt{2}}$
$|000010101\rangle + \frac{\beta}{8\sqrt{2}}\ |000010110\rangle + \frac{\beta}{8\sqrt{2}}\ |000010111\rangle + \frac{\beta}{8\sqrt{2}}\ |100011000\rangle + \frac{\beta}{8\sqrt{2}}\ |100011001\rangle + \frac{\beta}{8\sqrt{2}}\ |100011010\rangle + \frac{\beta}{8\sqrt{2}}$
$|100011011\rangle + \frac{\beta}{8\sqrt{2}}\ |100011100\rangle + \frac{\beta}{8\sqrt{2}}\ |100011101\rangle + \frac{\beta}{8\sqrt{2}}\ |100011110\rangle + \frac{\beta}{8\sqrt{2}}\ |100011111\rangle + \frac{\beta}{8\sqrt{2}}\ |100100000\rangle + \frac{\beta}{8\sqrt{2}}$
$|100100001\rangle + \frac{\beta}{8\sqrt{2}}\ |100100010\rangle + \frac{\beta}{8\sqrt{2}}\ |100100011\rangle + \frac{\beta}{8\sqrt{2}}\ |100100100\rangle + \frac{\beta}{8\sqrt{2}}\ |100100101\rangle + \frac{\beta}{8\sqrt{2}}\ |100100110\rangle + \frac{\beta}{8\sqrt{2}}$

$|100100111\rangle+\frac{\beta}{8\sqrt{2}}|000101000\rangle+\frac{\beta}{8\sqrt{2}}|000101001\rangle+\frac{\beta}{8\sqrt{2}}|000101010\rangle+\frac{\beta}{8\sqrt{2}}|000101011\rangle+\frac{\beta}{8\sqrt{2}}|000101100\rangle+\frac{\beta}{8\sqrt{2}}$
$|000101101\rangle+\frac{\beta}{8\sqrt{2}}|000101110\rangle+\frac{\beta}{8\sqrt{2}}|000101111\rangle-\frac{\beta}{8\sqrt{2}}|110110000\rangle-\frac{\beta}{8\sqrt{2}}|110110001\rangle-\frac{\beta}{8\sqrt{2}}|110110010\rangle-\frac{\beta}{8\sqrt{2}}$
$|110110011\rangle-\frac{\beta}{8\sqrt{2}}|110110100\rangle-\frac{\beta}{8\sqrt{2}}|110110101\rangle-\frac{\beta}{8\sqrt{2}}|110110110\rangle-\frac{\beta}{8\sqrt{2}}|110110111\rangle+\frac{\beta}{8\sqrt{2}}|010111000\rangle+\frac{\beta}{8\sqrt{2}}$
$|010111001\rangle+\frac{\beta}{8\sqrt{2}}|010111010\rangle+\frac{\beta}{8\sqrt{2}}|010111011\rangle+\frac{\beta}{8\sqrt{2}}|010111100\rangle+\frac{\beta}{8\sqrt{2}}|010111101\rangle+\frac{\beta}{8\sqrt{2}}|010111110\rangle+\frac{\beta}{8\sqrt{2}}$
$|010111111\rangle-\frac{\beta}{8\sqrt{2}}|001100000\rangle-\frac{\beta}{8\sqrt{2}}|001100001\rangle-\frac{\beta}{8\sqrt{2}}|001100010\rangle-\frac{\beta}{8\sqrt{2}}|001100011\rangle-\frac{\beta}{8\sqrt{2}}|001100100\rangle-\frac{\beta}{8\sqrt{2}}$
$|001100101\rangle-\frac{\beta}{8\sqrt{2}}|001100110\rangle-\frac{\beta}{8\sqrt{2}}|001100111\rangle-\frac{\beta}{8\sqrt{2}}|101101000\rangle-\frac{\beta}{8\sqrt{2}}|101101001\rangle-\frac{\beta}{8\sqrt{2}}|101101010\rangle-\frac{\beta}{8\sqrt{2}}$
$|101101011\rangle-\frac{\beta}{8\sqrt{2}}|101101100\rangle-\frac{\beta}{8\sqrt{2}}|101101101\rangle-\frac{\beta}{8\sqrt{2}}|101101110\rangle-\frac{\beta}{8\sqrt{2}}|101101111\rangle-\frac{\beta}{8\sqrt{2}}|011110000\rangle-\frac{\beta}{8\sqrt{2}}$
$|011110001\rangle-\frac{\beta}{8\sqrt{2}}|011110010\rangle-\frac{\beta}{8\sqrt{2}}|011110011\rangle-\frac{\beta}{8\sqrt{2}}|011110100\rangle-\frac{\beta}{8\sqrt{2}}|011110101\rangle-\frac{\beta}{8\sqrt{2}}|011110110\rangle-\frac{\beta}{8\sqrt{2}}$
$|011110111\rangle+\frac{\beta}{8\sqrt{2}}|111111000\rangle+\frac{\beta}{8\sqrt{2}}|111111001\rangle+\frac{\beta}{8\sqrt{2}}|111111010\rangle+\frac{\beta}{8\sqrt{2}}|111111011\rangle+\frac{\beta}{8\sqrt{2}}|111111100\rangle+\frac{\beta}{8\sqrt{2}}$
$|111111101\rangle+\frac{\beta}{8\sqrt{2}}|111111110\rangle+\frac{\beta}{8\sqrt{2}}|111111111\rangle-\frac{\beta}{8\sqrt{2}}|111000000\rangle-\frac{\beta}{8\sqrt{2}}|111000001\rangle-\frac{\beta}{8\sqrt{2}}|111000010\rangle-\frac{\beta}{8\sqrt{2}}$
$|111000011\rangle-\frac{\beta}{8\sqrt{2}}|111000100\rangle-\frac{\beta}{8\sqrt{2}}|111000101\rangle-\frac{\beta}{8\sqrt{2}}|111000110\rangle-\frac{\beta}{8\sqrt{2}}|111000111\rangle+\frac{\beta}{8\sqrt{2}}|011001000\rangle+\frac{\beta}{8\sqrt{2}}$
$|011001001\rangle+\frac{\beta}{8\sqrt{2}}|011001010\rangle+\frac{\beta}{8\sqrt{2}}|011001011\rangle+\frac{\beta}{8\sqrt{2}}|011001100\rangle+\frac{\beta}{8\sqrt{2}}|011001101\rangle+\frac{\beta}{8\sqrt{2}}|011001110\rangle+\frac{\beta}{8\sqrt{2}}$
$|011001111\rangle+\frac{\beta}{8\sqrt{2}}|101010000\rangle+\frac{\beta}{8\sqrt{2}}|101010001\rangle+\frac{\beta}{8\sqrt{2}}|101010010\rangle+\frac{\beta}{8\sqrt{2}}|101010011\rangle+\frac{\beta}{8\sqrt{2}}|101010100\rangle+\frac{\beta}{8\sqrt{2}}$
$|101010101\rangle+\frac{\beta}{8\sqrt{2}}|101010110\rangle+\frac{\beta}{8\sqrt{2}}|101010111\rangle+\frac{\beta}{8\sqrt{2}}|001011000\rangle+\frac{\beta}{8\sqrt{2}}|001011001\rangle+\frac{\beta}{8\sqrt{2}}|001011010\rangle+\frac{\beta}{8\sqrt{2}}$
$|001011011\rangle+\frac{\beta}{8\sqrt{2}}|001011100\rangle+\frac{\beta}{8\sqrt{2}}|001011101\rangle+\frac{\beta}{8\sqrt{2}}|001011110\rangle+\frac{\beta}{8\sqrt{2}}|001011111\rangle.$

- Porte X(3) :

$|\psi_3\rangle=\frac{\alpha}{8\sqrt{2}}|100000000\rangle+\frac{\alpha}{8\sqrt{2}}|100000001\rangle+\frac{\alpha}{8\sqrt{2}}|100000010\rangle+\frac{\alpha}{8\sqrt{2}}|100000011\rangle+\frac{\alpha}{8\sqrt{2}}|100000100\rangle+\frac{\alpha}{8\sqrt{2}}$
$|100000101\rangle+\frac{\alpha}{8\sqrt{2}}|100000110\rangle+\frac{\alpha}{8\sqrt{2}}|100000111\rangle+\frac{\alpha}{8\sqrt{2}}|001001000\rangle+\frac{\alpha}{8\sqrt{2}}|001001001\rangle+\frac{\alpha}{8\sqrt{2}}|001001010\rangle+\frac{\alpha}{8\sqrt{2}}$
$|001001011\rangle+\frac{\alpha}{8\sqrt{2}}|001001100\rangle+\frac{\alpha}{8\sqrt{2}}|001001101\rangle+\frac{\alpha}{8\sqrt{2}}|001001110\rangle+\frac{\alpha}{8\sqrt{2}}|001001111\rangle+\frac{\alpha}{8\sqrt{2}}|110010000\rangle+\frac{\alpha}{8\sqrt{2}}$
$|110010001\rangle+\frac{\alpha}{8\sqrt{2}}|110010010\rangle+\frac{\alpha}{8\sqrt{2}}|110010011\rangle+\frac{\alpha}{8\sqrt{2}}|110010100\rangle+\frac{\alpha}{8\sqrt{2}}|110010101\rangle+\frac{\alpha}{8\sqrt{2}}|110010110\rangle+\frac{\alpha}{8\sqrt{2}}$
$|110010111\rangle-\frac{\alpha}{8\sqrt{2}}|011011000\rangle-\frac{\alpha}{8\sqrt{2}}|011011001\rangle-\frac{\alpha}{8\sqrt{2}}|011011010\rangle-\frac{\alpha}{8\sqrt{2}}|011011011\rangle-\frac{\alpha}{8\sqrt{2}}|011011100\rangle-\frac{\alpha}{8\sqrt{2}}$
$|011011101\rangle-\frac{\alpha}{8\sqrt{2}}|011011110\rangle-\frac{\alpha}{8\sqrt{2}}|011011111\rangle+\frac{\alpha}{8\sqrt{2}}|010100000\rangle+\frac{\alpha}{8\sqrt{2}}|010100001\rangle+\frac{\alpha}{8\sqrt{2}}|010100010\rangle+\frac{\alpha}{8\sqrt{2}}$
$|010100011\rangle+\frac{\alpha}{8\sqrt{2}}|010100100\rangle+\frac{\alpha}{8\sqrt{2}}|010100101\rangle+\frac{\alpha}{8\sqrt{2}}|010100110\rangle+\frac{\alpha}{8\sqrt{2}}|010100111\rangle-\frac{\alpha}{8\sqrt{2}}|111101000\rangle-\frac{\alpha}{8\sqrt{2}}$
$|111101001\rangle-\frac{\alpha}{8\sqrt{2}}|111101010\rangle-\frac{\alpha}{8\sqrt{2}}|111101011\rangle-\frac{\alpha}{8\sqrt{2}}|111101100\rangle-\frac{\alpha}{8\sqrt{2}}|111101101\rangle-\frac{\alpha}{8\sqrt{2}}|111101110\rangle-\frac{\alpha}{8\sqrt{2}}$
$|111101111\rangle-\frac{\alpha}{8\sqrt{2}}|000110000\rangle-\frac{\alpha}{8\sqrt{2}}|000110001\rangle-\frac{\alpha}{8\sqrt{2}}|000110010\rangle-\frac{\alpha}{8\sqrt{2}}|000110011\rangle-\frac{\alpha}{8\sqrt{2}}|000110100\rangle-\frac{\alpha}{8\sqrt{2}}$
$|000110101\rangle-\frac{\alpha}{8\sqrt{2}}|000110110\rangle-\frac{\alpha}{8\sqrt{2}}|000110111\rangle-\frac{\alpha}{8\sqrt{2}}|101111000\rangle-\frac{\alpha}{8\sqrt{2}}|101111001\rangle-\frac{\alpha}{8\sqrt{2}}|101111010\rangle-\frac{\alpha}{8\sqrt{2}}$
$|101111011\rangle-\frac{\alpha}{8\sqrt{2}}|101111100\rangle-\frac{\alpha}{8\sqrt{2}}|101111101\rangle-\frac{\alpha}{8\sqrt{2}}|101111110\rangle-\frac{\alpha}{8\sqrt{2}}|101111111\rangle+\frac{\alpha}{8\sqrt{2}}|111100000\rangle+\frac{\alpha}{8\sqrt{2}}$
$|111100001\rangle+\frac{\alpha}{8\sqrt{2}}|111100010\rangle+\frac{\alpha}{8\sqrt{2}}|111100011\rangle+\frac{\alpha}{8\sqrt{2}}|111100100\rangle+\frac{\alpha}{8\sqrt{2}}|111100101\rangle+\frac{\alpha}{8\sqrt{2}}|111100110\rangle+\frac{\alpha}{8\sqrt{2}}$
$|111100111\rangle-\frac{\alpha}{8\sqrt{2}}|010101000\rangle-\frac{\alpha}{8\sqrt{2}}|010101001\rangle-\frac{\alpha}{8\sqrt{2}}|010101010\rangle-\frac{\alpha}{8\sqrt{2}}|010101011\rangle-\frac{\alpha}{8\sqrt{2}}|010101100\rangle-\frac{\alpha}{8\sqrt{2}}$
$|010101101\rangle-\frac{\alpha}{8\sqrt{2}}|010101110\rangle-\frac{\alpha}{8\sqrt{2}}|010101111\rangle+\frac{\alpha}{8\sqrt{2}}|101110000\rangle+\frac{\alpha}{8\sqrt{2}}|101110001\rangle+\frac{\alpha}{8\sqrt{2}}|101110010\rangle+\frac{\alpha}{8\sqrt{2}}$
$|101110011\rangle+\frac{\alpha}{8\sqrt{2}}|101110100\rangle+\frac{\alpha}{8\sqrt{2}}|101110101\rangle+\frac{\alpha}{8\sqrt{2}}|101110110\rangle+\frac{\alpha}{8\sqrt{2}}|101110111\rangle+\frac{\alpha}{8\sqrt{2}}|000111000\rangle+\frac{\alpha}{8\sqrt{2}}$
$|000111001\rangle+\frac{\alpha}{8\sqrt{2}}|000111010\rangle+\frac{\alpha}{8\sqrt{2}}|000111011\rangle+\frac{\alpha}{8\sqrt{2}}|000111100\rangle+\frac{\alpha}{8\sqrt{2}}|000111101\rangle+\frac{\alpha}{8\sqrt{2}}|000111110\rangle+\frac{\alpha}{8\sqrt{2}}$
$|000111111\rangle+\frac{\alpha}{8\sqrt{2}}|001000000\rangle+\frac{\alpha}{8\sqrt{2}}|001000001\rangle+\frac{\alpha}{8\sqrt{2}}|001000010\rangle+\frac{\alpha}{8\sqrt{2}}|001000011\rangle+\frac{\alpha}{8\sqrt{2}}|001000100\rangle+\frac{\alpha}{8\sqrt{2}}$
$|001000101\rangle+\frac{\alpha}{8\sqrt{2}}|001000110\rangle+\frac{\alpha}{8\sqrt{2}}|001000111\rangle+\frac{\alpha}{8\sqrt{2}}|100001000\rangle+\frac{\alpha}{8\sqrt{2}}|100001001\rangle+\frac{\alpha}{8\sqrt{2}}|100001010\rangle+\frac{\alpha}{8\sqrt{2}}$
$|100001011\rangle+\frac{\alpha}{8\sqrt{2}}|100001100\rangle+\frac{\alpha}{8\sqrt{2}}|100001101\rangle+\frac{\alpha}{8\sqrt{2}}|100001110\rangle+\frac{\alpha}{8\sqrt{2}}|100001111\rangle-\frac{\alpha}{8\sqrt{2}}|011010000\rangle-\frac{\alpha}{8\sqrt{2}}$
$|011010001\rangle-\frac{\alpha}{8\sqrt{2}}|011010010\rangle-\frac{\alpha}{8\sqrt{2}}|011010011\rangle-\frac{\alpha}{8\sqrt{2}}|011010100\rangle-\frac{\alpha}{8\sqrt{2}}|011010101\rangle-\frac{\alpha}{8\sqrt{2}}|011010110\rangle-\frac{\alpha}{8\sqrt{2}}$
$|011010111\rangle+\frac{\alpha}{8\sqrt{2}}|110011000\rangle+\frac{\alpha}{8\sqrt{2}}|110011001\rangle+\frac{\alpha}{8\sqrt{2}}|110011010\rangle+\frac{\alpha}{8\sqrt{2}}|110011011\rangle+\frac{\alpha}{8\sqrt{2}}|110011100\rangle+\frac{\alpha}{8\sqrt{2}}$
$|110011101\rangle+\frac{\alpha}{8\sqrt{2}}|110011110\rangle+\frac{\alpha}{8\sqrt{2}}|110011111\rangle+\frac{\beta}{8\sqrt{2}}|010000000\rangle+\frac{\beta}{8\sqrt{2}}|010000001\rangle+\frac{\beta}{8\sqrt{2}}|010000010\rangle+\frac{\beta}{8\sqrt{2}}$

$|010000011\rangle+\frac{\beta}{8\sqrt{2}}|010000100\rangle+\frac{\beta}{8\sqrt{2}}|010000101\rangle+\frac{\beta}{8\sqrt{2}}|010000110\rangle+\frac{\beta}{8\sqrt{2}}|010000111\rangle-\frac{\beta}{8\sqrt{2}}|111001000\rangle-\frac{\beta}{8\sqrt{2}}$
$|111001001\rangle-\frac{\beta}{8\sqrt{2}}|111001010\rangle-\frac{\beta}{8\sqrt{2}}|111001011\rangle-\frac{\beta}{8\sqrt{2}}|111001100\rangle-\frac{\beta}{8\sqrt{2}}|111001101\rangle-\frac{\beta}{8\sqrt{2}}|111001110\rangle-\frac{\beta}{8\sqrt{2}}$
$|111001111\rangle+\frac{\beta}{8\sqrt{2}}|000010000\rangle+\frac{\beta}{8\sqrt{2}}|000010001\rangle+\frac{\beta}{8\sqrt{2}}|000010010\rangle+\frac{\beta}{8\sqrt{2}}|000010011\rangle+\frac{\beta}{8\sqrt{2}}|000010100\rangle+\frac{\beta}{8\sqrt{2}}$
$|000010101\rangle+\frac{\beta}{8\sqrt{2}}|000010110\rangle+\frac{\beta}{8\sqrt{2}}|000010111\rangle+\frac{\beta}{8\sqrt{2}}|101011000\rangle+\frac{\beta}{8\sqrt{2}}|101011001\rangle+\frac{\beta}{8\sqrt{2}}|101011010\rangle+\frac{\beta}{8\sqrt{2}}$
$|101011011\rangle+\frac{\beta}{8\sqrt{2}}|101011100\rangle+\frac{\beta}{8\sqrt{2}}|101011101\rangle+\frac{\beta}{8\sqrt{2}}|101011110\rangle+\frac{\beta}{8\sqrt{2}}|101011111\rangle+\frac{\beta}{8\sqrt{2}}|100100000\rangle+\frac{\beta}{8\sqrt{2}}$
$|100100001\rangle+\frac{\beta}{8\sqrt{2}}|100100010\rangle+\frac{\beta}{8\sqrt{2}}|100100011\rangle+\frac{\beta}{8\sqrt{2}}|100100100\rangle+\frac{\beta}{8\sqrt{2}}|100100101\rangle+\frac{\beta}{8\sqrt{2}}|100100110\rangle+\frac{\beta}{8\sqrt{2}}$
$|100100111\rangle+\frac{\beta}{8\sqrt{2}}|001101000\rangle+\frac{\beta}{8\sqrt{2}}|001101001\rangle+\frac{\beta}{8\sqrt{2}}|001101010\rangle+\frac{\beta}{8\sqrt{2}}|001101011\rangle+\frac{\beta}{8\sqrt{2}}|001101100\rangle+\frac{\beta}{8\sqrt{2}}$
$|001101101\rangle+\frac{\beta}{8\sqrt{2}}|001101110\rangle+\frac{\beta}{8\sqrt{2}}|001101111\rangle-\frac{\beta}{8\sqrt{2}}|110110000\rangle-\frac{\beta}{8\sqrt{2}}|110110001\rangle-\frac{\beta}{8\sqrt{2}}|110110010\rangle-\frac{\beta}{8\sqrt{2}}$
$|110110011\rangle-\frac{\beta}{8\sqrt{2}}|110110100\rangle-\frac{\beta}{8\sqrt{2}}|110110101\rangle-\frac{\beta}{8\sqrt{2}}|110110110\rangle-\frac{\beta}{8\sqrt{2}}|110110111\rangle+\frac{\beta}{8\sqrt{2}}|011111000\rangle+\frac{\beta}{8\sqrt{2}}$
$|011111001\rangle+\frac{\beta}{8\sqrt{2}}|011111010\rangle+\frac{\beta}{8\sqrt{2}}|011111011\rangle+\frac{\beta}{8\sqrt{2}}|011111100\rangle+\frac{\beta}{8\sqrt{2}}|011111101\rangle+\frac{\beta}{8\sqrt{2}}|011111110\rangle+\frac{\beta}{8\sqrt{2}}$
$|011111111\rangle-\frac{\beta}{8\sqrt{2}}|001100000\rangle-\frac{\beta}{8\sqrt{2}}|001100001\rangle-\frac{\beta}{8\sqrt{2}}|001100010\rangle-\frac{\beta}{8\sqrt{2}}|001100011\rangle-\frac{\beta}{8\sqrt{2}}|001100100\rangle-\frac{\beta}{8\sqrt{2}}$
$|001100101\rangle-\frac{\beta}{8\sqrt{2}}|001100110\rangle-\frac{\beta}{8\sqrt{2}}|001100111\rangle-\frac{\beta}{8\sqrt{2}}|100101000\rangle-\frac{\beta}{8\sqrt{2}}|100101001\rangle-\frac{\beta}{8\sqrt{2}}|100101010\rangle-\frac{\beta}{8\sqrt{2}}$
$|100101011\rangle-\frac{\beta}{8\sqrt{2}}|100101100\rangle-\frac{\beta}{8\sqrt{2}}|100101101\rangle-\frac{\beta}{8\sqrt{2}}|100101110\rangle-\frac{\beta}{8\sqrt{2}}|100101111\rangle-\frac{\beta}{8\sqrt{2}}|011110000\rangle-\frac{\beta}{8\sqrt{2}}$
$|011110001\rangle-\frac{\beta}{8\sqrt{2}}|011110010\rangle-\frac{\beta}{8\sqrt{2}}|011110011\rangle-\frac{\beta}{8\sqrt{2}}|011110100\rangle-\frac{\beta}{8\sqrt{2}}|011110101\rangle-\frac{\beta}{8\sqrt{2}}|011110110\rangle-\frac{\beta}{8\sqrt{2}}$
$|011110111\rangle+\frac{\beta}{8\sqrt{2}}|110111000\rangle+\frac{\beta}{8\sqrt{2}}|110111001\rangle+\frac{\beta}{8\sqrt{2}}|110111010\rangle+\frac{\beta}{8\sqrt{2}}|110111011\rangle+\frac{\beta}{8\sqrt{2}}|110111100\rangle+\frac{\beta}{8\sqrt{2}}$
$|110111101\rangle+\frac{\beta}{8\sqrt{2}}|110111110\rangle+\frac{\beta}{8\sqrt{2}}|110111111\rangle-\frac{\beta}{8\sqrt{2}}|111000000\rangle-\frac{\beta}{8\sqrt{2}}|111000001\rangle-\frac{\beta}{8\sqrt{2}}|111000010\rangle-\frac{\beta}{8\sqrt{2}}$
$|111000011\rangle-\frac{\beta}{8\sqrt{2}}|111000100\rangle-\frac{\beta}{8\sqrt{2}}|111000101\rangle-\frac{\beta}{8\sqrt{2}}|111000110\rangle-\frac{\beta}{8\sqrt{2}}|111000111\rangle+\frac{\beta}{8\sqrt{2}}|010001000\rangle+\frac{\beta}{8\sqrt{2}}$
$|010001001\rangle+\frac{\beta}{8\sqrt{2}}|010001010\rangle+\frac{\beta}{8\sqrt{2}}|010001011\rangle+\frac{\beta}{8\sqrt{2}}|010001100\rangle+\frac{\beta}{8\sqrt{2}}|010001101\rangle+\frac{\beta}{8\sqrt{2}}|010001110\rangle+\frac{\beta}{8\sqrt{2}}$
$|010001111\rangle+\frac{\beta}{8\sqrt{2}}|101010000\rangle+\frac{\beta}{8\sqrt{2}}|101010001\rangle+\frac{\beta}{8\sqrt{2}}|101010010\rangle+\frac{\beta}{8\sqrt{2}}|101010011\rangle+\frac{\beta}{8\sqrt{2}}|101010100\rangle+\frac{\beta}{8\sqrt{2}}$
$|101010101\rangle+\frac{\beta}{8\sqrt{2}}|101010110\rangle+\frac{\beta}{8\sqrt{2}}|101010111\rangle+\frac{\beta}{8\sqrt{2}}|000011000\rangle+\frac{\beta}{8\sqrt{2}}|000011001\rangle+\frac{\beta}{8\sqrt{2}}|000011010\rangle+\frac{\beta}{8\sqrt{2}}$
$|000011011\rangle+\frac{\beta}{8\sqrt{2}}|000011100\rangle+\frac{\beta}{8\sqrt{2}}|000011101\rangle+\frac{\beta}{8\sqrt{2}}|000011110\rangle+\frac{\beta}{8\sqrt{2}}|000011111\rangle.$

- Porte Z(4) :

$|\psi_3\rangle=\frac{\alpha}{8\sqrt{2}}|100000000\rangle+\frac{\alpha}{8\sqrt{2}}|100000001\rangle+\frac{\alpha}{8\sqrt{2}}|100000010\rangle+\frac{\alpha}{8\sqrt{2}}|100000011\rangle+\frac{\alpha}{8\sqrt{2}}|100000100\rangle+\frac{\alpha}{8\sqrt{2}}$
$|100000101\rangle+\frac{\alpha}{8\sqrt{2}}|100000110\rangle+\frac{\alpha}{8\sqrt{2}}|100000111\rangle+\frac{\alpha}{8\sqrt{2}}|001001000\rangle+\frac{\alpha}{8\sqrt{2}}|001001001\rangle+\frac{\alpha}{8\sqrt{2}}|001001010\rangle+\frac{\alpha}{8\sqrt{2}}$
$|001001011\rangle+\frac{\alpha}{8\sqrt{2}}|001001100\rangle+\frac{\alpha}{8\sqrt{2}}|001001101\rangle+\frac{\alpha}{8\sqrt{2}}|001001110\rangle+\frac{\alpha}{8\sqrt{2}}|001001111\rangle+\frac{\alpha}{8\sqrt{2}}|110010000\rangle+\frac{\alpha}{8\sqrt{2}}$
$|110010001\rangle+\frac{\alpha}{8\sqrt{2}}|110010010\rangle+\frac{\alpha}{8\sqrt{2}}|110010011\rangle+\frac{\alpha}{8\sqrt{2}}|110010100\rangle+\frac{\alpha}{8\sqrt{2}}|110010101\rangle+\frac{\alpha}{8\sqrt{2}}|110010110\rangle+\frac{\alpha}{8\sqrt{2}}$
$|110010111\rangle-\frac{\alpha}{8\sqrt{2}}|011011000\rangle-\frac{\alpha}{8\sqrt{2}}|011011001\rangle-\frac{\alpha}{8\sqrt{2}}|011011010\rangle-\frac{\alpha}{8\sqrt{2}}|011011011\rangle-\frac{\alpha}{8\sqrt{2}}|011011100\rangle-\frac{\alpha}{8\sqrt{2}}$
$|011011101\rangle-\frac{\alpha}{8\sqrt{2}}|011011110\rangle-\frac{\alpha}{8\sqrt{2}}|011011111\rangle+\frac{\alpha}{8\sqrt{2}}|010100000\rangle+\frac{\alpha}{8\sqrt{2}}|010100001\rangle+\frac{\alpha}{8\sqrt{2}}|010100010\rangle+\frac{\alpha}{8\sqrt{2}}$
$|010100011\rangle+\frac{\alpha}{8\sqrt{2}}|010100100\rangle+\frac{\alpha}{8\sqrt{2}}|010100101\rangle+\frac{\alpha}{8\sqrt{2}}|010100110\rangle+\frac{\alpha}{8\sqrt{2}}|010100111\rangle+\frac{\alpha}{8\sqrt{2}}|111101000\rangle+\frac{\alpha}{8\sqrt{2}}$
$|111101001\rangle+\frac{\alpha}{8\sqrt{2}}|111101010\rangle+\frac{\alpha}{8\sqrt{2}}|111101011\rangle+\frac{\alpha}{8\sqrt{2}}|111101100\rangle+\frac{\alpha}{8\sqrt{2}}|111101101\rangle+\frac{\alpha}{8\sqrt{2}}|111101110\rangle+\frac{\alpha}{8\sqrt{2}}$
$|111101111\rangle-\frac{\alpha}{8\sqrt{2}}|000110000\rangle-\frac{\alpha}{8\sqrt{2}}|000110001\rangle-\frac{\alpha}{8\sqrt{2}}|000110010\rangle-\frac{\alpha}{8\sqrt{2}}|000110011\rangle-\frac{\alpha}{8\sqrt{2}}|000110100\rangle-\frac{\alpha}{8\sqrt{2}}$
$|000110101\rangle-\frac{\alpha}{8\sqrt{2}}|000110110\rangle-\frac{\alpha}{8\sqrt{2}}|000110111\rangle+\frac{\alpha}{8\sqrt{2}}|101111000\rangle+\frac{\alpha}{8\sqrt{2}}|101111001\rangle+\frac{\alpha}{8\sqrt{2}}|101111010\rangle+\frac{\alpha}{8\sqrt{2}}$
$|101111011\rangle+\frac{\alpha}{8\sqrt{2}}|101111100\rangle+\frac{\alpha}{8\sqrt{2}}|101111101\rangle+\frac{\alpha}{8\sqrt{2}}|101111110\rangle+\frac{\alpha}{8\sqrt{2}}|101111111\rangle+\frac{\alpha}{8\sqrt{2}}|111100000\rangle+\frac{\alpha}{8\sqrt{2}}$
$|111100001\rangle+\frac{\alpha}{8\sqrt{2}}|111100010\rangle+\frac{\alpha}{8\sqrt{2}}|111100011\rangle+\frac{\alpha}{8\sqrt{2}}|111100100\rangle+\frac{\alpha}{8\sqrt{2}}|111100101\rangle+\frac{\alpha}{8\sqrt{2}}|111100110\rangle+\frac{\alpha}{8\sqrt{2}}$
$|111100111\rangle+\frac{\alpha}{8\sqrt{2}}|010101000\rangle+\frac{\alpha}{8\sqrt{2}}|010101001\rangle+\frac{\alpha}{8\sqrt{2}}|010101010\rangle+\frac{\alpha}{8\sqrt{2}}|010101011\rangle+\frac{\alpha}{8\sqrt{2}}|010101100\rangle+\frac{\alpha}{8\sqrt{2}}$
$|010101101\rangle+\frac{\alpha}{8\sqrt{2}}|010101110\rangle+\frac{\alpha}{8\sqrt{2}}|010101111\rangle+\frac{\alpha}{8\sqrt{2}}|101110000\rangle+\frac{\alpha}{8\sqrt{2}}|101110001\rangle+\frac{\alpha}{8\sqrt{2}}|101110010\rangle+\frac{\alpha}{8\sqrt{2}}$
$|101110011\rangle+\frac{\alpha}{8\sqrt{2}}|101110100\rangle+\frac{\alpha}{8\sqrt{2}}|101110101\rangle+\frac{\alpha}{8\sqrt{2}}|101110110\rangle+\frac{\alpha}{8\sqrt{2}}|101110111\rangle-\frac{\alpha}{8\sqrt{2}}|000111000\rangle-\frac{\alpha}{8\sqrt{2}}$

$|000111001\rangle - \frac{\alpha}{8\sqrt{2}}\ |000111010\rangle - \frac{\alpha}{8\sqrt{2}}\ |000111011\rangle - \frac{\alpha}{8\sqrt{2}}\ |000111100\rangle - \frac{\alpha}{8\sqrt{2}}\ |000111101\rangle - \frac{\alpha}{8\sqrt{2}}\ |000111110\rangle - \frac{\alpha}{8\sqrt{2}}$
$|000111111\rangle + \frac{\alpha}{8\sqrt{2}}\ |001000000\rangle + \frac{\alpha}{8\sqrt{2}}\ |001000001\rangle + \frac{\alpha}{8\sqrt{2}}\ |001000010\rangle + \frac{\alpha}{8\sqrt{2}}\ |001000011\rangle + \frac{\alpha}{8\sqrt{2}}\ |001000100\rangle + \frac{\alpha}{8\sqrt{2}}$
$|001000101\rangle + \frac{\alpha}{8\sqrt{2}}\ |001000110\rangle + \frac{\alpha}{8\sqrt{2}}\ |001000111\rangle + \frac{\alpha}{8\sqrt{2}}\ |100001000\rangle + \frac{\alpha}{8\sqrt{2}}\ |100001001\rangle + \frac{\alpha}{8\sqrt{2}}\ |100001010\rangle + \frac{\alpha}{8\sqrt{2}}$
$|100001011\rangle + \frac{\alpha}{8\sqrt{2}}\ |100001100\rangle + \frac{\alpha}{8\sqrt{2}}\ |100001101\rangle + \frac{\alpha}{8\sqrt{2}}\ |100001110\rangle + \frac{\alpha}{8\sqrt{2}}\ |100001111\rangle - \frac{\alpha}{8\sqrt{2}}\ |011010000\rangle - \frac{\alpha}{8\sqrt{2}}$
$|011010001\rangle - \frac{\alpha}{8\sqrt{2}}\ |011010010\rangle - \frac{\alpha}{8\sqrt{2}}\ |011010011\rangle - \frac{\alpha}{8\sqrt{2}}\ |011010100\rangle - \frac{\alpha}{8\sqrt{2}}\ |011010101\rangle - \frac{\alpha}{8\sqrt{2}}\ |011010110\rangle - \frac{\alpha}{8\sqrt{2}}$
$|011010111\rangle + \frac{\alpha}{8\sqrt{2}}\ |110011000\rangle + \frac{\alpha}{8\sqrt{2}}\ |110011001\rangle + \frac{\alpha}{8\sqrt{2}}\ |110011010\rangle + \frac{\alpha}{8\sqrt{2}}\ |110011011\rangle + \frac{\alpha}{8\sqrt{2}}\ |110011100\rangle + \frac{\alpha}{8\sqrt{2}}$
$|110011101\rangle + \frac{\alpha}{8\sqrt{2}}\ |110011110\rangle + \frac{\alpha}{8\sqrt{2}}\ |110011111\rangle + \frac{\beta}{8\sqrt{2}}\ |010000000\rangle + \frac{\beta}{8\sqrt{2}}\ |010000001\rangle + \frac{\beta}{8\sqrt{2}}\ |010000010\rangle + \frac{\beta}{8\sqrt{2}}$
$|010000011\rangle + \frac{\beta}{8\sqrt{2}}\ |010000100\rangle + \frac{\beta}{8\sqrt{2}}\ |010000101\rangle + \frac{\beta}{8\sqrt{2}}\ |010000110\rangle + \frac{\beta}{8\sqrt{2}}\ |010000111\rangle - \frac{\beta}{8\sqrt{2}}\ |111001000\rangle - \frac{\beta}{8\sqrt{2}}$
$|111001001\rangle - \frac{\beta}{8\sqrt{2}}\ |111001010\rangle - \frac{\beta}{8\sqrt{2}}\ |111001011\rangle - \frac{\beta}{8\sqrt{2}}\ |111001100\rangle - \frac{\beta}{8\sqrt{2}}\ |111001101\rangle - \frac{\beta}{8\sqrt{2}}\ |111001110\rangle - \frac{\beta}{8\sqrt{2}}$
$|111001111\rangle + \frac{\beta}{8\sqrt{2}}\ |000010000\rangle + \frac{\beta}{8\sqrt{2}}\ |000010001\rangle + \frac{\beta}{8\sqrt{2}}\ |000010010\rangle + \frac{\beta}{8\sqrt{2}}\ |000010011\rangle + \frac{\beta}{8\sqrt{2}}\ |000010100\rangle + \frac{\beta}{8\sqrt{2}}$
$|000010101\rangle + \frac{\beta}{8\sqrt{2}}\ |000010110\rangle + \frac{\beta}{8\sqrt{2}}\ |000010111\rangle + \frac{\beta}{8\sqrt{2}}\ |101011000\rangle + \frac{\beta}{8\sqrt{2}}\ |101011001\rangle + \frac{\beta}{8\sqrt{2}}\ |101011010\rangle + \frac{\beta}{8\sqrt{2}}$
$|101011011\rangle + \frac{\beta}{8\sqrt{2}}\ |101011100\rangle + \frac{\beta}{8\sqrt{2}}\ |101011101\rangle + \frac{\beta}{8\sqrt{2}}\ |101011110\rangle + \frac{\beta}{8\sqrt{2}}\ |101011111\rangle + \frac{\beta}{8\sqrt{2}}\ |100100000\rangle + \frac{\beta}{8\sqrt{2}}$
$|100100001\rangle + \frac{\beta}{8\sqrt{2}}\ |100100010\rangle + \frac{\beta}{8\sqrt{2}}\ |100100011\rangle + \frac{\beta}{8\sqrt{2}}\ |100100100\rangle + \frac{\beta}{8\sqrt{2}}\ |100100101\rangle + \frac{\beta}{8\sqrt{2}}\ |100100110\rangle + \frac{\beta}{8\sqrt{2}}$
$|100100111\rangle - \frac{\beta}{8\sqrt{2}}\ |001101000\rangle - \frac{\beta}{8\sqrt{2}}\ |001101001\rangle - \frac{\beta}{8\sqrt{2}}\ |001101010\rangle - \frac{\beta}{8\sqrt{2}}\ |001101011\rangle - \frac{\beta}{8\sqrt{2}}\ |001101100\rangle - \frac{\beta}{8\sqrt{2}}$
$|001101101\rangle - \frac{\beta}{8\sqrt{2}}\ |001101110\rangle - \frac{\beta}{8\sqrt{2}}\ |001101111\rangle - \frac{\beta}{8\sqrt{2}}\ |110110000\rangle - \frac{\beta}{8\sqrt{2}}\ |110110001\rangle - \frac{\beta}{8\sqrt{2}}\ |110110010\rangle - \frac{\beta}{8\sqrt{2}}$
$|110110011\rangle - \frac{\beta}{8\sqrt{2}}\ |110110100\rangle - \frac{\beta}{8\sqrt{2}}\ |110110101\rangle - \frac{\beta}{8\sqrt{2}}\ |110110110\rangle - \frac{\beta}{8\sqrt{2}}\ |110110111\rangle - \frac{\beta}{8\sqrt{2}}\ |011111000\rangle - \frac{\beta}{8\sqrt{2}}$
$|011111001\rangle - \frac{\beta}{8\sqrt{2}}\ |011111010\rangle - \frac{\beta}{8\sqrt{2}}\ |011111011\rangle - \frac{\beta}{8\sqrt{2}}\ |011111100\rangle - \frac{\beta}{8\sqrt{2}}\ |011111101\rangle - \frac{\beta}{8\sqrt{2}}\ |011111110\rangle - \frac{\beta}{8\sqrt{2}}$
$|011111111\rangle - \frac{\beta}{8\sqrt{2}}\ |001100000\rangle - \frac{\beta}{8\sqrt{2}}\ |001100001\rangle - \frac{\beta}{8\sqrt{2}}\ |001100010\rangle - \frac{\beta}{8\sqrt{2}}\ |001100011\rangle - \frac{\beta}{8\sqrt{2}}\ |001100100\rangle - \frac{\beta}{8\sqrt{2}}$
$|001100101\rangle - \frac{\beta}{8\sqrt{2}}\ |001100110\rangle - \frac{\beta}{8\sqrt{2}}\ |001100111\rangle + \frac{\beta}{8\sqrt{2}}\ |100101000\rangle + \frac{\beta}{8\sqrt{2}}\ |100101001\rangle + \frac{\beta}{8\sqrt{2}}\ |100101010\rangle + \frac{\beta}{8\sqrt{2}}$
$|100101011\rangle + \frac{\beta}{8\sqrt{2}}\ |100101100\rangle + \frac{\beta}{8\sqrt{2}}\ |100101101\rangle + \frac{\beta}{8\sqrt{2}}\ |100101110\rangle + \frac{\beta}{8\sqrt{2}}\ |100101111\rangle - \frac{\beta}{8\sqrt{2}}\ |011110000\rangle - \frac{\beta}{8\sqrt{2}}$
$|011110001\rangle - \frac{\beta}{8\sqrt{2}}\ |011110010\rangle - \frac{\beta}{8\sqrt{2}}\ |011110011\rangle - \frac{\beta}{8\sqrt{2}}\ |011110100\rangle - \frac{\beta}{8\sqrt{2}}\ |011110101\rangle - \frac{\beta}{8\sqrt{2}}\ |011110110\rangle - \frac{\beta}{8\sqrt{2}}$
$|011110111\rangle - \frac{\beta}{8\sqrt{2}}\ |110111000\rangle - \frac{\beta}{8\sqrt{2}}\ |110111001\rangle - \frac{\beta}{8\sqrt{2}}\ |110111010\rangle - \frac{\beta}{8\sqrt{2}}\ |110111011\rangle - \frac{\beta}{8\sqrt{2}}\ |110111100\rangle - \frac{\beta}{8\sqrt{2}}$
$|110111101\rangle - \frac{\beta}{8\sqrt{2}}\ |110111110\rangle - \frac{\beta}{8\sqrt{2}}\ |110111111\rangle - \frac{\beta}{8\sqrt{2}}\ |111000000\rangle - \frac{\beta}{8\sqrt{2}}\ |111000001\rangle - \frac{\beta}{8\sqrt{2}}\ |111000010\rangle - \frac{\beta}{8\sqrt{2}}$
$|111000011\rangle - \frac{\beta}{8\sqrt{2}}\ |111000100\rangle - \frac{\beta}{8\sqrt{2}}\ |111000101\rangle - \frac{\beta}{8\sqrt{2}}\ |111000110\rangle - \frac{\beta}{8\sqrt{2}}\ |111000111\rangle + \frac{\beta}{8\sqrt{2}}\ |010001000\rangle + \frac{\beta}{8\sqrt{2}}$
$|010001001\rangle + \frac{\beta}{8\sqrt{2}}\ |010001010\rangle + \frac{\beta}{8\sqrt{2}}\ |010001011\rangle + \frac{\beta}{8\sqrt{2}}\ |010001100\rangle + \frac{\beta}{8\sqrt{2}}\ |010001101\rangle + \frac{\beta}{8\sqrt{2}}\ |010001110\rangle + \frac{\beta}{8\sqrt{2}}$
$|010001111\rangle + \frac{\beta}{8\sqrt{2}}\ |101010000\rangle + \frac{\beta}{8\sqrt{2}}\ |101010001\rangle + \frac{\beta}{8\sqrt{2}}\ |101010010\rangle + \frac{\beta}{8\sqrt{2}}\ |101010011\rangle + \frac{\beta}{8\sqrt{2}}\ |101010100\rangle + \frac{\beta}{8\sqrt{2}}$
$|101010101\rangle + \frac{\beta}{8\sqrt{2}}\ |101010110\rangle + \frac{\beta}{8\sqrt{2}}\ |101010111\rangle + \frac{\beta}{8\sqrt{2}}\ |000011000\rangle + \frac{\beta}{8\sqrt{2}}\ |000011001\rangle + \frac{\beta}{8\sqrt{2}}\ |000011010\rangle + \frac{\beta}{8\sqrt{2}}$
$|000011011\rangle + \frac{\beta}{8\sqrt{2}}\ |000011100\rangle + \frac{\beta}{8\sqrt{2}}\ |000011101\rangle + \frac{\beta}{8\sqrt{2}}\ |000011110\rangle + \frac{\beta}{8\sqrt{2}}\ |000011111\rangle.$

✓ M_1 :

- Porte Z(1) :

$|\psi_3\rangle = \frac{\alpha}{8\sqrt{2}}\ |100000000\rangle + \frac{\alpha}{8\sqrt{2}}\ |100000001\rangle + \frac{\alpha}{8\sqrt{2}}\ |100000010\rangle + \frac{\alpha}{8\sqrt{2}}\ |100000011 \frac{\alpha}{8\sqrt{2}}\ |100000100\rangle - \frac{\alpha}{8\sqrt{2}}\ |100000101\rangle -$
$\frac{\alpha}{8\sqrt{2}}\ |100000110\rangle - \frac{\alpha}{8\sqrt{2}}\ |100000111\rangle + \frac{\alpha}{8\sqrt{2}}\ |001001000\rangle + \frac{\alpha}{8\sqrt{2}}\ |001001001\rangle + \frac{\alpha}{8\sqrt{2}}\ |001001010\rangle + \frac{\alpha}{8\sqrt{2}}\ |001001011\rangle + \frac{\alpha}{8\sqrt{2}}$
$|001001100\rangle + \frac{\alpha}{8\sqrt{2}}\ |001001101\rangle + \frac{\alpha}{8\sqrt{2}}\ |001001110\rangle + \frac{\alpha}{8\sqrt{2}}\ |001001111\rangle + \frac{\alpha}{8\sqrt{2}}\ |110010000\rangle + \frac{\alpha}{8\sqrt{2}}\ |110010001\rangle + \frac{\alpha}{8\sqrt{2}}$
$|110010010\rangle + \frac{\alpha}{8\sqrt{2}}\ |110010011\rangle - \frac{\alpha}{8\sqrt{2}}\ |110010100\rangle - \frac{\alpha}{8\sqrt{2}}\ |110010101\rangle - \frac{\alpha}{8\sqrt{2}}\ |110010110\rangle - \frac{\alpha}{8\sqrt{2}}\ |110010111\rangle - \frac{\alpha}{8\sqrt{2}}$
$|011011000\rangle - \frac{\alpha}{8\sqrt{2}}\ |011011001\rangle - \frac{\alpha}{8\sqrt{2}}\ |011011010\rangle - \frac{\alpha}{8\sqrt{2}}\ |011011011\rangle - \frac{\alpha}{8\sqrt{2}}\ |011011100\rangle - \frac{\alpha}{8\sqrt{2}}\ |011011101\rangle - \frac{\alpha}{8\sqrt{2}}$
$|011011110\rangle - \frac{\alpha}{8\sqrt{2}}\ |011011111\rangle + \frac{\alpha}{8\sqrt{2}}\ |010100000\rangle + \frac{\alpha}{8\sqrt{2}}\ |010100001\rangle + \frac{\alpha}{8\sqrt{2}}\ |010100010\rangle + \frac{\alpha}{8\sqrt{2}}\ |010100011\rangle + \frac{\alpha}{8\sqrt{2}}$
$|010100100\rangle + \frac{\alpha}{8\sqrt{2}}\ |010100101\rangle + \frac{\alpha}{8\sqrt{2}}\ |010100110\rangle + \frac{\alpha}{8\sqrt{2}}\ |010100111\rangle + \frac{\alpha}{8\sqrt{2}}\ |111101000\rangle + \frac{\alpha}{8\sqrt{2}}\ |111101001\rangle + \frac{\alpha}{8\sqrt{2}}$
$|111101010\rangle + \frac{\alpha}{8\sqrt{2}}\ |111101011\rangle - \frac{\alpha}{8\sqrt{2}}\ |111101100\rangle - \frac{\alpha}{8\sqrt{2}}\ |111101101\rangle - \frac{\alpha}{8\sqrt{2}}\ |111101110\rangle - \frac{\alpha}{8\sqrt{2}}\ |111101111\rangle - \frac{\alpha}{8\sqrt{2}}$

$|000110000\rangle - \frac{\alpha}{8\sqrt{2}}$ $|000110001\rangle - \frac{\alpha}{8\sqrt{2}}$ $|000110010\rangle - \frac{\alpha}{8\sqrt{2}}$ $|000110011\rangle - \frac{\alpha}{8\sqrt{2}}$ $|000110100\rangle - \frac{\alpha}{8\sqrt{2}}$ $|000110101\rangle - \frac{\alpha}{8\sqrt{2}}$
$|000110110\rangle - \frac{\alpha}{8\sqrt{2}}$ $|000110111\rangle + \frac{\alpha}{8\sqrt{2}}$ $|101111000\rangle + \frac{\alpha}{8\sqrt{2}}$ $|101111001\rangle + \frac{\alpha}{8\sqrt{2}}$ $|101111010\rangle + \frac{\alpha}{8\sqrt{2}}$ $|101111011\rangle - \frac{\alpha}{8\sqrt{2}}$
$|101111100\rangle - \frac{\alpha}{8\sqrt{2}}$ $|101111101\rangle - \frac{\alpha}{8\sqrt{2}}$ $|101111110\rangle - \frac{\alpha}{8\sqrt{2}}$ $|101111111\rangle + \frac{\alpha}{8\sqrt{2}}$ $|111100000\rangle + \frac{\alpha}{8\sqrt{2}}$ $|111100001\rangle + \frac{\alpha}{8\sqrt{2}}$
$|111100010\rangle + \frac{\alpha}{8\sqrt{2}}$ $|111100011\rangle - \frac{\alpha}{8\sqrt{2}}$ $|111100100\rangle - \frac{\alpha}{8\sqrt{2}}$ $|111100101\rangle - \frac{\alpha}{8\sqrt{2}}$ $|111100110\rangle - \frac{\alpha}{8\sqrt{2}}$ $|111100111\rangle + \frac{\alpha}{8\sqrt{2}}$
$|010101000\rangle + \frac{\alpha}{8\sqrt{2}}$ $|010101001\rangle + \frac{\alpha}{8\sqrt{2}}$ $|010101010\rangle + \frac{\alpha}{8\sqrt{2}}$ $|010101011\rangle + \frac{\alpha}{8\sqrt{2}}$ $|010101100\rangle + \frac{\alpha}{8\sqrt{2}}$ $|010101101\rangle + \frac{\alpha}{8\sqrt{2}}$
$|010101110\rangle + \frac{\alpha}{8\sqrt{2}}$ $|010101111\rangle + \frac{\alpha}{8\sqrt{2}}$ $|101110000\rangle + \frac{\alpha}{8\sqrt{2}}$ $|101110001\rangle + \frac{\alpha}{8\sqrt{2}}$ $|101110010\rangle + \frac{\alpha}{8\sqrt{2}}$ $|101110011\rangle - \frac{\alpha}{8\sqrt{2}}$
$|101110100\rangle - \frac{\alpha}{8\sqrt{2}}$ $|101110101\rangle - \frac{\alpha}{8\sqrt{2}}$ $|101110110\rangle - \frac{\alpha}{8\sqrt{2}}$ $|101110111\rangle - \frac{\alpha}{8\sqrt{2}}$ $|000111000\rangle - \frac{\alpha}{8\sqrt{2}}$ $|000111001\rangle - \frac{\alpha}{8\sqrt{2}}$
$|000111010\rangle - \frac{\alpha}{8\sqrt{2}}$ $|000111011\rangle - \frac{\alpha}{8\sqrt{2}}$ $|000111100\rangle - \frac{\alpha}{8\sqrt{2}}$ $|000111101\rangle - \frac{\alpha}{8\sqrt{2}}$ $|000111110\rangle - \frac{\alpha}{8\sqrt{2}}$ $|000111111\rangle + \frac{\alpha}{8\sqrt{2}}$
$|001000000\rangle + \frac{\alpha}{8\sqrt{2}}$ $|001000001\rangle + \frac{\alpha}{8\sqrt{2}}$ $|001000010\rangle + \frac{\alpha}{8\sqrt{2}}$ $|001000011\rangle + \frac{\alpha}{8\sqrt{2}}$ $|001000100\rangle + \frac{\alpha}{8\sqrt{2}}$ $|001000101\rangle + \frac{\alpha}{8\sqrt{2}}$
$|001000110\rangle + \frac{\alpha}{8\sqrt{2}}$ $|001000111\rangle + \frac{\alpha}{8\sqrt{2}}$ $|100001000\rangle + \frac{\alpha}{8\sqrt{2}}$ $|100001001\rangle + \frac{\alpha}{8\sqrt{2}}$ $|100001010\rangle + \frac{\alpha}{8\sqrt{2}}$ $|100001011\rangle - \frac{\alpha}{8\sqrt{2}}$
$|100001100\rangle - \frac{\alpha}{8\sqrt{2}}$ $|100001101\rangle - \frac{\alpha}{8\sqrt{2}}$ $|100001110\rangle - \frac{\alpha}{8\sqrt{2}}$ $|100001111\rangle - \frac{\alpha}{8\sqrt{2}}$ $|011010000\rangle - \frac{\alpha}{8\sqrt{2}}$ $|011010001\rangle - \frac{\alpha}{8\sqrt{2}}$
$|011010010\rangle - \frac{\alpha}{8\sqrt{2}}$ $|011010011\rangle - \frac{\alpha}{8\sqrt{2}}$ $|011010100\rangle - \frac{\alpha}{8\sqrt{2}}$ $|011010101\rangle - \frac{\alpha}{8\sqrt{2}}$ $|011010110\rangle - \frac{\alpha}{8\sqrt{2}}$ $|011010111\rangle + \frac{\alpha}{8\sqrt{2}}$
$|110011000\rangle + \frac{\alpha}{8\sqrt{2}}$ $|110011001\rangle + \frac{\alpha}{8\sqrt{2}}$ $|110011010\rangle + \frac{\alpha}{8\sqrt{2}}$ $|110011011\rangle - \frac{\alpha}{8\sqrt{2}}$ $|110011100\rangle - \frac{\alpha}{8\sqrt{2}}$ $|110011101\rangle - \frac{\alpha}{8\sqrt{2}}$
$|110011110\rangle - \frac{\alpha}{8\sqrt{2}}$ $|110011111\rangle + \frac{\beta}{8\sqrt{2}}$ $|010000000\rangle + \frac{\beta}{8\sqrt{2}}$ $|010000001\rangle + \frac{\beta}{8\sqrt{2}}$ $|010000010\rangle + \frac{\beta}{8\sqrt{2}}$ $|010000011\rangle + \frac{\beta}{8\sqrt{2}}$
$|010000100\rangle + \frac{\beta}{8\sqrt{2}}$ $|010000101\rangle + \frac{\beta}{8\sqrt{2}}$ $|010000110\rangle + \frac{\beta}{8\sqrt{2}}$ $|010000111\rangle - \frac{\beta}{8\sqrt{2}}$ $|111001000\rangle - \frac{\beta}{8\sqrt{2}}$ $|111001001\rangle - \frac{\beta}{8\sqrt{2}}$
$|111001010\rangle - \frac{\beta}{8\sqrt{2}}$ $|111001011\rangle + \frac{\beta}{8\sqrt{2}}$ $|111001100\rangle + \frac{\beta}{8\sqrt{2}}$ $|111001101\rangle + \frac{\beta}{8\sqrt{2}}$ $|111001110\rangle + \frac{\beta}{8\sqrt{2}}$ $|111001111\rangle + \frac{\beta}{8\sqrt{2}}$
$|000010000\rangle + \frac{\beta}{8\sqrt{2}}$ $|000010001\rangle + \frac{\beta}{8\sqrt{2}}$ $|000010010\rangle + \frac{\beta}{8\sqrt{2}}$ $|000010011\rangle + \frac{\beta}{8\sqrt{2}}$ $|000010100\rangle + \frac{\beta}{8\sqrt{2}}$ $|000010101\rangle + \frac{\beta}{8\sqrt{2}}$
$|000010110\rangle + \frac{\beta}{8\sqrt{2}}$ $|000010111\rangle + \frac{\beta}{8\sqrt{2}}$ $|101011000\rangle + \frac{\beta}{8\sqrt{2}}$ $|101011001\rangle + \frac{\beta}{8\sqrt{2}}$ $|101011010\rangle + \frac{\beta}{8\sqrt{2}}$ $|101011011\rangle - \frac{\beta}{8\sqrt{2}}$
$|101011100\rangle - \frac{\beta}{8\sqrt{2}}$ $|101011101\rangle - \frac{\beta}{8\sqrt{2}}$ $|101011110\rangle - \frac{\beta}{8\sqrt{2}}$ $|101011111\rangle + \frac{\beta}{8\sqrt{2}}$ $|100100000\rangle + \frac{\beta}{8\sqrt{2}}$ $|100100001\rangle + \frac{\beta}{8\sqrt{2}}$
$|100100010\rangle + \frac{\beta}{8\sqrt{2}}$ $|100100011\rangle - \frac{\beta}{8\sqrt{2}}$ $|100100100\rangle - \frac{\beta}{8\sqrt{2}}$ $|100100101\rangle - \frac{\beta}{8\sqrt{2}}$ $|100100110\rangle - \frac{\beta}{8\sqrt{2}}$ $|100100111\rangle - \frac{\beta}{8\sqrt{2}}$
$|001101000\rangle - \frac{\beta}{8\sqrt{2}}$ $|001101001\rangle - \frac{\beta}{8\sqrt{2}}$ $|001101010\rangle - \frac{\beta}{8\sqrt{2}}$ $|001101011\rangle - \frac{\beta}{8\sqrt{2}}$ $|001101100\rangle - \frac{\beta}{8\sqrt{2}}$ $|001101101\rangle - \frac{\beta}{8\sqrt{2}}$
$|001101110\rangle - \frac{\beta}{8\sqrt{2}}$ $|001101111\rangle - \frac{\beta}{8\sqrt{2}}$ $|110110000\rangle - \frac{\beta}{8\sqrt{2}}$ $|110110001\rangle - \frac{\beta}{8\sqrt{2}}$ $|110110010\rangle - \frac{\beta}{8\sqrt{2}}$ $|110110011\rangle + \frac{\beta}{8\sqrt{2}}$
$|110110100\rangle + \frac{\beta}{8\sqrt{2}}$ $|110110101\rangle + \frac{\beta}{8\sqrt{2}}$ $|110110110\rangle + \frac{\beta}{8\sqrt{2}}$ $|110110111\rangle - \frac{\beta}{8\sqrt{2}}$ $|011111000\rangle - \frac{\beta}{8\sqrt{2}}$ $|011111001\rangle - \frac{\beta}{8\sqrt{2}}$
$|011111010\rangle - \frac{\beta}{8\sqrt{2}}$ $|011111011\rangle - \frac{\beta}{8\sqrt{2}}$ $|011111100\rangle - \frac{\beta}{8\sqrt{2}}$ $|011111101\rangle - \frac{\beta}{8\sqrt{2}}$ $|011111110\rangle - \frac{\beta}{8\sqrt{2}}$ $|011111111\rangle - \frac{\beta}{8\sqrt{2}}$
$|001100000\rangle - \frac{\beta}{8\sqrt{2}}$ $|001100001\rangle - \frac{\beta}{8\sqrt{2}}$ $|001100010\rangle - \frac{\beta}{8\sqrt{2}}$ $|001100011\rangle - \frac{\beta}{8\sqrt{2}}$ $|001100100\rangle - \frac{\beta}{8\sqrt{2}}$ $|001100101\rangle - \frac{\beta}{8\sqrt{2}}$
$|001100110\rangle - \frac{\beta}{8\sqrt{2}}$ $|001100111\rangle + \frac{\beta}{8\sqrt{2}}$ $|100101000\rangle + \frac{\beta}{8\sqrt{2}}$ $|100101001\rangle + \frac{\beta}{8\sqrt{2}}$ $|100101010\rangle + \frac{\beta}{8\sqrt{2}}$ $|100101011\rangle - \frac{\beta}{8\sqrt{2}}$
$|100101100\rangle - \frac{\beta}{8\sqrt{2}}$ $|100101101\rangle - \frac{\beta}{8\sqrt{2}}$ $|100101110\rangle - \frac{\beta}{8\sqrt{2}}$ $|100101111\rangle - \frac{\beta}{8\sqrt{2}}$ $|011110000\rangle - \frac{\beta}{8\sqrt{2}}$ $|011110001\rangle - \frac{\beta}{8\sqrt{2}}$
$|011110010\rangle - \frac{\beta}{8\sqrt{2}}$ $|011110011\rangle - \frac{\beta}{8\sqrt{2}}$ $|011110100\rangle - \frac{\beta}{8\sqrt{2}}$ $|011110101\rangle - \frac{\beta}{8\sqrt{2}}$ $|011110110\rangle - \frac{\beta}{8\sqrt{2}}$ $|011110111\rangle - \frac{\beta}{8\sqrt{2}}$
$|110111000\rangle - \frac{\beta}{8\sqrt{2}}$ $|110111001\rangle - \frac{\beta}{8\sqrt{2}}$ $|110111010\rangle - \frac{\beta}{8\sqrt{2}}$ $|110111011\rangle + \frac{\beta}{8\sqrt{2}}$ $|110111100\rangle + \frac{\beta}{8\sqrt{2}}$ $|110111101\rangle + \frac{\beta}{8\sqrt{2}}$
$|110111110\rangle + \frac{\beta}{8\sqrt{2}}$ $|110111111\rangle - \frac{\beta}{8\sqrt{2}}$ $|111000000\rangle - \frac{\beta}{8\sqrt{2}}$ $|111000001\rangle - \frac{\beta}{8\sqrt{2}}$ $|111000010\rangle - \frac{\beta}{8\sqrt{2}}$ $|111000011\rangle + \frac{\beta}{8\sqrt{2}}$
$|111000100\rangle + \frac{\beta}{8\sqrt{2}}$ $|111000101\rangle + \frac{\beta}{8\sqrt{2}}$ $|111000110\rangle + \frac{\beta}{8\sqrt{2}}$ $|111000111\rangle + \frac{\beta}{8\sqrt{2}}$ $|010001000\rangle + \frac{\beta}{8\sqrt{2}}$ $|010001001\rangle + \frac{\beta}{8\sqrt{2}}$
$|010001010\rangle + \frac{\beta}{8\sqrt{2}}$ $|010001011\rangle + \frac{\beta}{8\sqrt{2}}$ $|010001100\rangle + \frac{\beta}{8\sqrt{2}}$ $|010001101\rangle + \frac{\beta}{8\sqrt{2}}$ $|010001110\rangle + \frac{\beta}{8\sqrt{2}}$ $|010001111\rangle + \frac{\beta}{8\sqrt{2}}$
$|101010000\rangle + \frac{\beta}{8\sqrt{2}}$ $|101010001\rangle + \frac{\beta}{8\sqrt{2}}$ $|101010010\rangle + \frac{\beta}{8\sqrt{2}}$ $|101010011\rangle - \frac{\beta}{8\sqrt{2}}$ $|101010100\rangle - \frac{\beta}{8\sqrt{2}}$ $|101010101\rangle - \frac{\beta}{8\sqrt{2}}$
$|101010110\rangle - \frac{\beta}{8\sqrt{2}}$ $|101010111\rangle + \frac{\beta}{8\sqrt{2}}$ $|000011000\rangle + \frac{\beta}{8\sqrt{2}}$ $|000011001\rangle + \frac{\beta}{8\sqrt{2}}$ $|000011010\rangle + \frac{\beta}{8\sqrt{2}}$ $|000011011\rangle + \frac{\beta}{8\sqrt{2}}$
$|000011100\rangle + \frac{\beta}{8\sqrt{2}}$ $|000011101\rangle + \frac{\beta}{8\sqrt{2}}$ $|000011110\rangle + \frac{\beta}{8\sqrt{2}}$ $|000011111\rangle$.

- Porte Z(2) :

$$
\begin{aligned}
|\psi_3\rangle = {} & \frac{\alpha}{8\sqrt{2}}|100000000\rangle + \frac{\alpha}{8\sqrt{2}}|100000001\rangle + \frac{\alpha}{8\sqrt{2}}|100000010\rangle + \frac{\alpha}{8\sqrt{2}}|100000011\rangle - \frac{\alpha}{8\sqrt{2}}|100000100\rangle - \frac{\alpha}{8\sqrt{2}} \\
& |100000101\rangle - \frac{\alpha}{8\sqrt{2}}|100000110\rangle - \frac{\alpha}{8\sqrt{2}}|100000111\rangle + \frac{\alpha}{8\sqrt{2}}|001001000\rangle + \frac{\alpha}{8\sqrt{2}}|001001001\rangle + \frac{\alpha}{8\sqrt{2}}|001001010\rangle + \frac{\alpha}{8\sqrt{2}} \\
& |001001011\rangle + \frac{\alpha}{8\sqrt{2}}|001001100\rangle + \frac{\alpha}{8\sqrt{2}}|001001101\rangle + \frac{\alpha}{8\sqrt{2}}|001001110\rangle + \frac{\alpha}{8\sqrt{2}}|001001111\rangle + \frac{\alpha}{8\sqrt{2}}|110010000\rangle + \frac{\alpha}{8\sqrt{2}} \\
& |110010001\rangle + \frac{\alpha}{8\sqrt{2}}|110010010\rangle + \frac{\alpha}{8\sqrt{2}}|110010011\rangle + \frac{\alpha}{8\sqrt{2}}|110010100\rangle + \frac{\alpha}{8\sqrt{2}}|110010101\rangle + \frac{\alpha}{8\sqrt{2}}|110010110\rangle + \frac{\alpha}{8\sqrt{2}} \\
& |110010111\rangle - \frac{\alpha}{8\sqrt{2}}|011011000\rangle - \frac{\alpha}{8\sqrt{2}}|011011001\rangle - \frac{\alpha}{8\sqrt{2}}|011011010\rangle - \frac{\alpha}{8\sqrt{2}}|011011011\rangle + \frac{\alpha}{8\sqrt{2}}|011011100\rangle + \frac{\alpha}{8\sqrt{2}} \\
& |011011101\rangle + \frac{\alpha}{8\sqrt{2}}|011011110\rangle + \frac{\alpha}{8\sqrt{2}}|011011111\rangle + \frac{\alpha}{8\sqrt{2}}|010100000\rangle + \frac{\alpha}{8\sqrt{2}}|010100001\rangle + \frac{\alpha}{8\sqrt{2}}|010100010\rangle + \frac{\alpha}{8\sqrt{2}} \\
& |010100011\rangle - \frac{\alpha}{8\sqrt{2}}|010100100\rangle - \frac{\alpha}{8\sqrt{2}}|010100101\rangle - \frac{\alpha}{8\sqrt{2}}|010100110\rangle - \frac{\alpha}{8\sqrt{2}}|010100111\rangle + \frac{\alpha}{8\sqrt{2}}|111101000\rangle + \frac{\alpha}{8\sqrt{2}} \\
& |111101001\rangle + \frac{\alpha}{8\sqrt{2}}|111101010\rangle + \frac{\alpha}{8\sqrt{2}}|111101011\rangle + \frac{\alpha}{8\sqrt{2}}|111101100\rangle + \frac{\alpha}{8\sqrt{2}}|111101101\rangle + \frac{\alpha}{8\sqrt{2}}|111101110\rangle + \frac{\alpha}{8\sqrt{2}} \\
& |111101111\rangle - \frac{\alpha}{8\sqrt{2}}|000110000\rangle - \frac{\alpha}{8\sqrt{2}}|000110001\rangle - \frac{\alpha}{8\sqrt{2}}|000110010\rangle - \frac{\alpha}{8\sqrt{2}}|000110011\rangle - \frac{\alpha}{8\sqrt{2}}|000110100\rangle - \frac{\alpha}{8\sqrt{2}} \\
& |000110101\rangle - \frac{\alpha}{8\sqrt{2}}|000110110\rangle - \frac{\alpha}{8\sqrt{2}}|000110111\rangle + \frac{\alpha}{8\sqrt{2}}|101111000\rangle + \frac{\alpha}{8\sqrt{2}}|101111001\rangle + \frac{\alpha}{8\sqrt{2}}|101111010\rangle + \frac{\alpha}{8\sqrt{2}} \\
& |101111011\rangle - \frac{\alpha}{8\sqrt{2}}|101111100\rangle - \frac{\alpha}{8\sqrt{2}}|101111101\rangle - \frac{\alpha}{8\sqrt{2}}|101111110\rangle - \frac{\alpha}{8\sqrt{2}}|101111111\rangle + \frac{\alpha}{8\sqrt{2}}|111100000\rangle + \frac{\alpha}{8\sqrt{2}} \\
& |111100001\rangle + \frac{\alpha}{8\sqrt{2}}|111100010\rangle + \frac{\alpha}{8\sqrt{2}}|111100011\rangle + \frac{\alpha}{8\sqrt{2}}|111100100\rangle + \frac{\alpha}{8\sqrt{2}}|111100101\rangle + \frac{\alpha}{8\sqrt{2}}|111100110\rangle + \frac{\alpha}{8\sqrt{2}} \\
& |111100111\rangle + \frac{\alpha}{8\sqrt{2}}|010101000\rangle + \frac{\alpha}{8\sqrt{2}}|010101001\rangle + \frac{\alpha}{8\sqrt{2}}|010101010\rangle + \frac{\alpha}{8\sqrt{2}}|010101011\rangle - \frac{\alpha}{8\sqrt{2}}|010101100\rangle - \frac{\alpha}{8\sqrt{2}} \\
& |010101101\rangle - \frac{\alpha}{8\sqrt{2}}|010101110\rangle - \frac{\alpha}{8\sqrt{2}}|010101111\rangle + \frac{\alpha}{8\sqrt{2}}|101110000\rangle + \frac{\alpha}{8\sqrt{2}}|101110001\rangle + \frac{\alpha}{8\sqrt{2}}|101110010\rangle + \frac{\alpha}{8\sqrt{2}} \\
& |101110011\rangle - \frac{\alpha}{8\sqrt{2}}|101110100\rangle - \frac{\alpha}{8\sqrt{2}}|101110101\rangle - \frac{\alpha}{8\sqrt{2}}|101110110\rangle - \frac{\alpha}{8\sqrt{2}}|101110111\rangle - \frac{\alpha}{8\sqrt{2}}|000111000\rangle - \frac{\alpha}{8\sqrt{2}} \\
& |000111001\rangle - \frac{\alpha}{8\sqrt{2}}|000111010\rangle - \frac{\alpha}{8\sqrt{2}}|000111011\rangle - \frac{\alpha}{8\sqrt{2}}|000111100\rangle - \frac{\alpha}{8\sqrt{2}}|000111101\rangle - \frac{\alpha}{8\sqrt{2}}|000111110\rangle - \frac{\alpha}{8\sqrt{2}} \\
& |000111111\rangle + \frac{\alpha}{8\sqrt{2}}|001000000\rangle + \frac{\alpha}{8\sqrt{2}}|001000001\rangle + \frac{\alpha}{8\sqrt{2}}|001000010\rangle + \frac{\alpha}{8\sqrt{2}}|001000011\rangle + \frac{\alpha}{8\sqrt{2}}|001000100\rangle + \frac{\alpha}{8\sqrt{2}} \\
& |001000101\rangle + \frac{\alpha}{8\sqrt{2}}|001000110\rangle + \frac{\alpha}{8\sqrt{2}}|001000111\rangle + \frac{\alpha}{8\sqrt{2}}|100001000\rangle + \frac{\alpha}{8\sqrt{2}}|100001001\rangle + \frac{\alpha}{8\sqrt{2}}|100001010\rangle + \frac{\alpha}{8\sqrt{2}} \\
& |100001011\rangle - \frac{\alpha}{8\sqrt{2}}|100001100\rangle - \frac{\alpha}{8\sqrt{2}}|100001101\rangle - \frac{\alpha}{8\sqrt{2}}|100001110\rangle - \frac{\alpha}{8\sqrt{2}}|100001111\rangle - \frac{\alpha}{8\sqrt{2}}|011010000\rangle - \frac{\alpha}{8\sqrt{2}} \\
& |011010001\rangle - \frac{\alpha}{8\sqrt{2}}|011010010\rangle - \frac{\alpha}{8\sqrt{2}}|011010011\rangle + \frac{\alpha}{8\sqrt{2}}|011010100\rangle + \frac{\alpha}{8\sqrt{2}}|011010101\rangle + \frac{\alpha}{8\sqrt{2}}|011010110\rangle + \frac{\alpha}{8\sqrt{2}} \\
& |011010111\rangle + \frac{\alpha}{8\sqrt{2}}|110011000\rangle + \frac{\alpha}{8\sqrt{2}}|110011001\rangle + \frac{\alpha}{8\sqrt{2}}|110011010\rangle + \frac{\alpha}{8\sqrt{2}}|110011011\rangle + \frac{\alpha}{8\sqrt{2}}|110011100\rangle + \frac{\alpha}{8\sqrt{2}} \\
& |110011101\rangle + \frac{\alpha}{8\sqrt{2}}|110011110\rangle + \frac{\alpha}{8\sqrt{2}}|110011111\rangle + \frac{\beta}{8\sqrt{2}}|010000000\rangle + \frac{\beta}{8\sqrt{2}}|010000001\rangle + \frac{\beta}{8\sqrt{2}}|010000010\rangle + \frac{\beta}{8\sqrt{2}} \\
& |010000011\rangle - \frac{\beta}{8\sqrt{2}}|010000100\rangle - \frac{\beta}{8\sqrt{2}}|010000101\rangle - \frac{\beta}{8\sqrt{2}}|010000110\rangle - \frac{\beta}{8\sqrt{2}}|010000111\rangle - \frac{\beta}{8\sqrt{2}}|111001000\rangle - \frac{\beta}{8\sqrt{2}} \\
& |111001001\rangle - \frac{\beta}{8\sqrt{2}}|111001010\rangle - \frac{\beta}{8\sqrt{2}}|111001011\rangle - \frac{\beta}{8\sqrt{2}}|111001100\rangle - \frac{\beta}{8\sqrt{2}}|111001101\rangle - \frac{\beta}{8\sqrt{2}}|111001110\rangle - \frac{\beta}{8\sqrt{2}} \\
& |111001111\rangle + \frac{\beta}{8\sqrt{2}}|000010000\rangle + \frac{\beta}{8\sqrt{2}}|000010001\rangle + \frac{\beta}{8\sqrt{2}}|000010010\rangle + \frac{\beta}{8\sqrt{2}}|000010011\rangle + \frac{\beta}{8\sqrt{2}}|000010100\rangle + \frac{\beta}{8\sqrt{2}} \\
& |000010101\rangle + \frac{\beta}{8\sqrt{2}}|000010110\rangle + \frac{\beta}{8\sqrt{2}}|000010111\rangle + \frac{\beta}{8\sqrt{2}}|101011000\rangle + \frac{\beta}{8\sqrt{2}}|101011001\rangle + \frac{\beta}{8\sqrt{2}}|101011010\rangle + \frac{\beta}{8\sqrt{2}} \\
& |101011011\rangle - \frac{\beta}{8\sqrt{2}}|101011100\rangle - \frac{\beta}{8\sqrt{2}}|101011101\rangle - \frac{\beta}{8\sqrt{2}}|101011110\rangle - \frac{\beta}{8\sqrt{2}}|101011111\rangle + \frac{\beta}{8\sqrt{2}}|100100000\rangle + \frac{\beta}{8\sqrt{2}} \\
& |100100001\rangle + \frac{\beta}{8\sqrt{2}}|100100010\rangle + \frac{\beta}{8\sqrt{2}}|100100011\rangle - \frac{\beta}{8\sqrt{2}}|100100100\rangle - \frac{\beta}{8\sqrt{2}}|100100101\rangle - \frac{\beta}{8\sqrt{2}}|100100110\rangle - \frac{\beta}{8\sqrt{2}} \\
& |100100111\rangle - \frac{\beta}{8\sqrt{2}}|001101000\rangle - \frac{\beta}{8\sqrt{2}}|001101001\rangle - \frac{\beta}{8\sqrt{2}}|001101010\rangle - \frac{\beta}{8\sqrt{2}}|001101011\rangle - \frac{\beta}{8\sqrt{2}}|001101100\rangle - \frac{\beta}{8\sqrt{2}} \\
& |001101101\rangle - \frac{\beta}{8\sqrt{2}}|001101110\rangle - \frac{\beta}{8\sqrt{2}}|001101111\rangle - \frac{\beta}{8\sqrt{2}}|110110000\rangle - \frac{\beta}{8\sqrt{2}}|110110001\rangle - \frac{\beta}{8\sqrt{2}}|110110010\rangle - \frac{\beta}{8\sqrt{2}} \\
& |110110011\rangle - \frac{\beta}{8\sqrt{2}}|110110100\rangle - \frac{\beta}{8\sqrt{2}}|110110101\rangle - \frac{\beta}{8\sqrt{2}}|110110110\rangle - \frac{\beta}{8\sqrt{2}}|110110111\rangle - \frac{\beta}{8\sqrt{2}}|011111000\rangle - \frac{\beta}{8\sqrt{2}} \\
& |011111001\rangle - \frac{\beta}{8\sqrt{2}}|011111010\rangle - \frac{\beta}{8\sqrt{2}}|011111011\rangle + \frac{\beta}{8\sqrt{2}}|011111100\rangle + \frac{\beta}{8\sqrt{2}}|011111101\rangle + \frac{\beta}{8\sqrt{2}}|011111110\rangle + \frac{\beta}{8\sqrt{2}} \\
& |011111111\rangle - \frac{\beta}{8\sqrt{2}}|001100000\rangle - \frac{\beta}{8\sqrt{2}}|001100001\rangle - \frac{\beta}{8\sqrt{2}}|001100010\rangle - \frac{\beta}{8\sqrt{2}}|001100011\rangle - \frac{\beta}{8\sqrt{2}}|001100100\rangle - \frac{\beta}{8\sqrt{2}} \\
& |001100101\rangle - \frac{\beta}{8\sqrt{2}}|001100110\rangle - \frac{\beta}{8\sqrt{2}}|001100111\rangle + \frac{\beta}{8\sqrt{2}}|100101000\rangle + \frac{\beta}{8\sqrt{2}}|100101001\rangle + \frac{\beta}{8\sqrt{2}}|100101010\rangle + \frac{\beta}{8\sqrt{2}} \\
& |100101011\rangle - \frac{\beta}{8\sqrt{2}}|100101100\rangle - \frac{\beta}{8\sqrt{2}}|100101101\rangle - \frac{\beta}{8\sqrt{2}}|100101110\rangle - \frac{\beta}{8\sqrt{2}}|100101111\rangle - \frac{\beta}{8\sqrt{2}}|011110000\rangle - \frac{\beta}{8\sqrt{2}} \\
& |011110001\rangle - \frac{\beta}{8\sqrt{2}}|011110010\rangle - \frac{\beta}{8\sqrt{2}}|011110011\rangle + \frac{\beta}{8\sqrt{2}}|011110100\rangle + \frac{\beta}{8\sqrt{2}}|011110101\rangle + \frac{\beta}{8\sqrt{2}}|011110110\rangle + \frac{\beta}{8\sqrt{2}} \\
& |011110111\rangle - \frac{\beta}{8\sqrt{2}}|110111000\rangle - \frac{\beta}{8\sqrt{2}}|110111001\rangle - \frac{\beta}{8\sqrt{2}}|110111010\rangle - \frac{\beta}{8\sqrt{2}}|110111011\rangle - \frac{\beta}{8\sqrt{2}}|110111100\rangle - \frac{\beta}{8\sqrt{2}} \\
& |110111101\rangle - \frac{\beta}{8\sqrt{2}}|110111110\rangle - \frac{\beta}{8\sqrt{2}}|110111111\rangle - \frac{\beta}{8\sqrt{2}}|111000000\rangle - \frac{\beta}{8\sqrt{2}}|111000001\rangle - \frac{\beta}{8\sqrt{2}}|111000010\rangle - \frac{\beta}{8\sqrt{2}} \\
& |111000011\rangle - \frac{\beta}{8\sqrt{2}}|111000100\rangle - \frac{\beta}{8\sqrt{2}}|111000101\rangle - \frac{\beta}{8\sqrt{2}}|111000110\rangle - \frac{\beta}{8\sqrt{2}}|111000111\rangle + \frac{\beta}{8\sqrt{2}}|010001000\rangle + \frac{\beta}{8\sqrt{2}} \\
& |010001001\rangle + \frac{\beta}{8\sqrt{2}}|010001010\rangle + \frac{\beta}{8\sqrt{2}}|010001011\rangle - \frac{\beta}{8\sqrt{2}}|010001100\rangle - \frac{\beta}{8\sqrt{2}}|010001101\rangle - \frac{\beta}{8\sqrt{2}}|010001110\rangle - \frac{\beta}{8\sqrt{2}}
\end{aligned}
$$

$|010001111\rangle+\frac{\beta}{8\sqrt{2}}|101010000\rangle+\frac{\beta}{8\sqrt{2}}|101010001\rangle+\frac{\beta}{8\sqrt{2}}|101010010\rangle+\frac{\beta}{8\sqrt{2}}|101010011\rangle-\frac{\beta}{8\sqrt{2}}|101010100\rangle-\frac{\beta}{8\sqrt{2}}$
$|101010101\rangle-\frac{\beta}{8\sqrt{2}}|101010110\rangle-\frac{\beta}{8\sqrt{2}}|101010111\rangle+\frac{\beta}{8\sqrt{2}}|000011000\rangle+\frac{\beta}{8\sqrt{2}}|000011001\rangle+\frac{\beta}{8\sqrt{2}}|000011010\rangle+\frac{\beta}{8\sqrt{2}}$
$|000011011\rangle+\frac{\beta}{8\sqrt{2}}|000011100\rangle+\frac{\beta}{8\sqrt{2}}|000011101\rangle+\frac{\beta}{8\sqrt{2}}|000011110\rangle+\frac{\beta}{8\sqrt{2}}|000011111\rangle.$

- Porte Z(3) :

$|\psi_3\rangle=\frac{\alpha}{8\sqrt{2}}|100000000\rangle+\frac{\alpha}{8\sqrt{2}}|100000001\rangle+\frac{\alpha}{8\sqrt{2}}|100000010\rangle+\frac{\alpha}{8\sqrt{2}}|100000011\rangle-\frac{\alpha}{8\sqrt{2}}|100000100\rangle-\frac{\alpha}{8\sqrt{2}}$
$|100000101\rangle-\frac{\alpha}{8\sqrt{2}}|100000110\rangle-\frac{\alpha}{8\sqrt{2}}|100000111\rangle+\frac{\alpha}{8\sqrt{2}}|001001000\rangle+\frac{\alpha}{8\sqrt{2}}|001001001\rangle+\frac{\alpha}{8\sqrt{2}}|001001010\rangle+\frac{\alpha}{8\sqrt{2}}$
$|001001011\rangle-\frac{\alpha}{8\sqrt{2}}|001001100\rangle-\frac{\alpha}{8\sqrt{2}}|001001101\rangle-\frac{\alpha}{8\sqrt{2}}|001001110\rangle-\frac{\alpha}{8\sqrt{2}}|001001111\rangle+\frac{\alpha}{8\sqrt{2}}|110010000\rangle+\frac{\alpha}{8\sqrt{2}}$
$|110010001\rangle+\frac{\alpha}{8\sqrt{2}}|110010010\rangle+\frac{\alpha}{8\sqrt{2}}|110010011\rangle+\frac{\alpha}{8\sqrt{2}}|110010100\rangle+\frac{\alpha}{8\sqrt{2}}|110010101\rangle+\frac{\alpha}{8\sqrt{2}}|110010110\rangle+\frac{\alpha}{8\sqrt{2}}$
$|110010111\rangle-\frac{\alpha}{8\sqrt{2}}|011011000\rangle-\frac{\alpha}{8\sqrt{2}}|011011001\rangle-\frac{\alpha}{8\sqrt{2}}|011011010\rangle-\frac{\alpha}{8\sqrt{2}}|011011011\rangle-\frac{\alpha}{8\sqrt{2}}|011011100\rangle-\frac{\alpha}{8\sqrt{2}}$
$|011011101\rangle-\frac{\alpha}{8\sqrt{2}}|011011110\rangle-\frac{\alpha}{8\sqrt{2}}|011011111\rangle+\frac{\alpha}{8\sqrt{2}}|010100000\rangle+\frac{\alpha}{8\sqrt{2}}|010100001\rangle+\frac{\alpha}{8\sqrt{2}}|010100010\rangle+\frac{\alpha}{8\sqrt{2}}$
$|010100011\rangle-\frac{\alpha}{8\sqrt{2}}|010100100\rangle-\frac{\alpha}{8\sqrt{2}}|010100101\rangle-\frac{\alpha}{8\sqrt{2}}|010100110\rangle-\frac{\alpha}{8\sqrt{2}}|010100111\rangle+\frac{\alpha}{8\sqrt{2}}|111101000\rangle+\frac{\alpha}{8\sqrt{2}}$
$|111101001\rangle+\frac{\alpha}{8\sqrt{2}}|111101010\rangle+\frac{\alpha}{8\sqrt{2}}|111101011\rangle-\frac{\alpha}{8\sqrt{2}}|111101100\rangle-\frac{\alpha}{8\sqrt{2}}|111101101\rangle-\frac{\alpha}{8\sqrt{2}}|111101110\rangle-\frac{\alpha}{8\sqrt{2}}$
$|111101111\rangle-\frac{\alpha}{8\sqrt{2}}|000110000\rangle-\frac{\alpha}{8\sqrt{2}}|000110001\rangle-\frac{\alpha}{8\sqrt{2}}|000110010\rangle-\frac{\alpha}{8\sqrt{2}}|000110011\rangle-\frac{\alpha}{8\sqrt{2}}|000110100\rangle-\frac{\alpha}{8\sqrt{2}}$
$|000110101\rangle-\frac{\alpha}{8\sqrt{2}}|000110110\rangle-\frac{\alpha}{8\sqrt{2}}|000110111\rangle+\frac{\alpha}{8\sqrt{2}}|101111000\rangle+\frac{\alpha}{8\sqrt{2}}|101111001\rangle+\frac{\alpha}{8\sqrt{2}}|101111010\rangle+\frac{\alpha}{8\sqrt{2}}$
$|101111011\rangle+\frac{\alpha}{8\sqrt{2}}|101111100\rangle+\frac{\alpha}{8\sqrt{2}}|101111101\rangle+\frac{\alpha}{8\sqrt{2}}|101111110\rangle+\frac{\alpha}{8\sqrt{2}}|101111111\rangle+\frac{\alpha}{8\sqrt{2}}|111100000\rangle+\frac{\alpha}{8\sqrt{2}}$
$|111100001\rangle+\frac{\alpha}{8\sqrt{2}}|111100010\rangle+\frac{\alpha}{8\sqrt{2}}|111100011\rangle-\frac{\alpha}{8\sqrt{2}}|111100100\rangle-\frac{\alpha}{8\sqrt{2}}|111100101\rangle-\frac{\alpha}{8\sqrt{2}}|111100110\rangle-\frac{\alpha}{8\sqrt{2}}$
$|111100111\rangle+\frac{\alpha}{8\sqrt{2}}|010101000\rangle+\frac{\alpha}{8\sqrt{2}}|010101001\rangle+\frac{\alpha}{8\sqrt{2}}|010101010\rangle+\frac{\alpha}{8\sqrt{2}}|010101011\rangle-\frac{\alpha}{8\sqrt{2}}|010101100\rangle-\frac{\alpha}{8\sqrt{2}}$
$|010101101\rangle-\frac{\alpha}{8\sqrt{2}}|010101110\rangle-\frac{\alpha}{8\sqrt{2}}|010101111\rangle+\frac{\alpha}{8\sqrt{2}}|101110000\rangle+\frac{\alpha}{8\sqrt{2}}|101110001\rangle+\frac{\alpha}{8\sqrt{2}}|101110010\rangle+\frac{\alpha}{8\sqrt{2}}$
$|101110011\rangle+\frac{\alpha}{8\sqrt{2}}|101110100\rangle+\frac{\alpha}{8\sqrt{2}}|101110101\rangle+\frac{\alpha}{8\sqrt{2}}|101110110\rangle+\frac{\alpha}{8\sqrt{2}}|101110111\rangle-\frac{\alpha}{8\sqrt{2}}|000111000\rangle-\frac{\alpha}{8\sqrt{2}}$
$|000111001\rangle-\frac{\alpha}{8\sqrt{2}}|000111010\rangle-\frac{\alpha}{8\sqrt{2}}|000111011\rangle-\frac{\alpha}{8\sqrt{2}}|000111100\rangle-\frac{\alpha}{8\sqrt{2}}|000111101\rangle-\frac{\alpha}{8\sqrt{2}}|000111110\rangle-\frac{\alpha}{8\sqrt{2}}$
$|000111111\rangle+\frac{\alpha}{8\sqrt{2}}|001000000\rangle+\frac{\alpha}{8\sqrt{2}}|001000001\rangle+\frac{\alpha}{8\sqrt{2}}|001000010\rangle+\frac{\alpha}{8\sqrt{2}}|001000011\rangle-\frac{\alpha}{8\sqrt{2}}|001000100\rangle-\frac{\alpha}{8\sqrt{2}}$
$|001000101\rangle-\frac{\alpha}{8\sqrt{2}}|001000110\rangle-\frac{\alpha}{8\sqrt{2}}|001000111\rangle+\frac{\alpha}{8\sqrt{2}}|100001000\rangle+\frac{\alpha}{8\sqrt{2}}|100001001\rangle+\frac{\alpha}{8\sqrt{2}}|100001010\rangle+\frac{\alpha}{8\sqrt{2}}$
$|100001011\rangle-\frac{\alpha}{8\sqrt{2}}|100001100\rangle-\frac{\alpha}{8\sqrt{2}}|100001101\rangle-\frac{\alpha}{8\sqrt{2}}|100001110\rangle-\frac{\alpha}{8\sqrt{2}}|100001111\rangle-\frac{\alpha}{8\sqrt{2}}|011010000\rangle-\frac{\alpha}{8\sqrt{2}}$
$|011010001\rangle-\frac{\alpha}{8\sqrt{2}}|011010010\rangle-\frac{\alpha}{8\sqrt{2}}|011010011\rangle-\frac{\alpha}{8\sqrt{2}}|011010100\rangle-\frac{\alpha}{8\sqrt{2}}|011010101\rangle-\frac{\alpha}{8\sqrt{2}}|011010110\rangle-\frac{\alpha}{8\sqrt{2}}$
$|011010111\rangle+\frac{\alpha}{8\sqrt{2}}|110011000\rangle+\frac{\alpha}{8\sqrt{2}}|110011001\rangle+\frac{\alpha}{8\sqrt{2}}|110011010\rangle+\frac{\alpha}{8\sqrt{2}}|110011011\rangle+\frac{\alpha}{8\sqrt{2}}|110011100\rangle+\frac{\alpha}{8\sqrt{2}}$
$|110011101\rangle+\frac{\alpha}{8\sqrt{2}}|110011110\rangle+\frac{\alpha}{8\sqrt{2}}|110011111\rangle+\frac{\beta}{8\sqrt{2}}|010000000\rangle+\frac{\beta}{8\sqrt{2}}|010000001\rangle+\frac{\beta}{8\sqrt{2}}|010000010\rangle+\frac{\beta}{8\sqrt{2}}$
$|010000011\rangle-\frac{\beta}{8\sqrt{2}}|010000100\rangle-\frac{\beta}{8\sqrt{2}}|010000101\rangle-\frac{\beta}{8\sqrt{2}}|010000110\rangle-\frac{\beta}{8\sqrt{2}}|010000111\rangle-\frac{\beta}{8\sqrt{2}}|111001000\rangle-\frac{\beta}{8\sqrt{2}}$
$|111001001\rangle-\frac{\beta}{8\sqrt{2}}|111001010\rangle-\frac{\beta}{8\sqrt{2}}|111001011\rangle+\frac{\beta}{8\sqrt{2}}|111001100\rangle+\frac{\beta}{8\sqrt{2}}|111001101\rangle+\frac{\beta}{8\sqrt{2}}|111001110\rangle+\frac{\beta}{8\sqrt{2}}$
$|111001111\rangle+\frac{\beta}{8\sqrt{2}}|000010000\rangle+\frac{\beta}{8\sqrt{2}}|000010001\rangle+\frac{\beta}{8\sqrt{2}}|000010010\rangle+\frac{\beta}{8\sqrt{2}}|000010011\rangle+\frac{\beta}{8\sqrt{2}}|000010100\rangle+\frac{\beta}{8\sqrt{2}}$
$|000010101\rangle+\frac{\beta}{8\sqrt{2}}|000010110\rangle+\frac{\beta}{8\sqrt{2}}|000010111\rangle+\frac{\beta}{8\sqrt{2}}|101011000\rangle+\frac{\beta}{8\sqrt{2}}|101011001\rangle+\frac{\beta}{8\sqrt{2}}|101011010\rangle+\frac{\beta}{8\sqrt{2}}$
$|101011011\rangle+\frac{\beta}{8\sqrt{2}}|101011100\rangle+\frac{\beta}{8\sqrt{2}}|101011101\rangle+\frac{\beta}{8\sqrt{2}}|101011110\rangle+\frac{\beta}{8\sqrt{2}}|101011111\rangle+\frac{\beta}{8\sqrt{2}}|100100000\rangle+\frac{\beta}{8\sqrt{2}}$
$|100100001\rangle+\frac{\beta}{8\sqrt{2}}|100100010\rangle+\frac{\beta}{8\sqrt{2}}|100100011\rangle-\frac{\beta}{8\sqrt{2}}|100100100\rangle-\frac{\beta}{8\sqrt{2}}|100100101\rangle-\frac{\beta}{8\sqrt{2}}|100100110\rangle-\frac{\beta}{8\sqrt{2}}$
$|100100111\rangle-\frac{\beta}{8\sqrt{2}}|001101000\rangle-\frac{\beta}{8\sqrt{2}}|001101001\rangle-\frac{\beta}{8\sqrt{2}}|001101010\rangle-\frac{\beta}{8\sqrt{2}}|001101011\rangle+\frac{\beta}{8\sqrt{2}}|001101100\rangle+\frac{\beta}{8\sqrt{2}}$
$|001101101\rangle+\frac{\beta}{8\sqrt{2}}|001101110\rangle+\frac{\beta}{8\sqrt{2}}|001101111\rangle-\frac{\beta}{8\sqrt{2}}|110110000\rangle-\frac{\beta}{8\sqrt{2}}|110110001\rangle-\frac{\beta}{8\sqrt{2}}|110110010\rangle-\frac{\beta}{8\sqrt{2}}$
$|110110011\rangle-\frac{\beta}{8\sqrt{2}}|110110100\rangle-\frac{\beta}{8\sqrt{2}}|110110101\rangle-\frac{\beta}{8\sqrt{2}}|110110110\rangle-\frac{\beta}{8\sqrt{2}}|110110111\rangle-\frac{\beta}{8\sqrt{2}}|011111000\rangle-\frac{\beta}{8\sqrt{2}}$
$|011111001\rangle-\frac{\beta}{8\sqrt{2}}|011111010\rangle-\frac{\beta}{8\sqrt{2}}|011111011\rangle-\frac{\beta}{8\sqrt{2}}|011111100\rangle-\frac{\beta}{8\sqrt{2}}|011111101\rangle-\frac{\beta}{8\sqrt{2}}|011111110\rangle-\frac{\beta}{8\sqrt{2}}$
$|011111111\rangle-\frac{\beta}{8\sqrt{2}}|001100000\rangle-\frac{\beta}{8\sqrt{2}}|001100001\rangle-\frac{\beta}{8\sqrt{2}}|001100010\rangle-\frac{\beta}{8\sqrt{2}}|001100011\rangle+\frac{\beta}{8\sqrt{2}}|001100100\rangle+\frac{\beta}{8\sqrt{2}}$
$|001100101\rangle+\frac{\beta}{8\sqrt{2}}|001100110\rangle+\frac{\beta}{8\sqrt{2}}|001100111\rangle+\frac{\beta}{8\sqrt{2}}|100101000\rangle+\frac{\beta}{8\sqrt{2}}|100101001\rangle+\frac{\beta}{8\sqrt{2}}|100101010\rangle+\frac{\beta}{8\sqrt{2}}$

$|100101011\rangle - \frac{\beta}{8\sqrt{2}}\ |100101100\rangle - \frac{\beta}{8\sqrt{2}}\ |100101101\rangle - \frac{\beta}{8\sqrt{2}}\ |100101110\rangle - \frac{\beta}{8\sqrt{2}}\ |100101111\rangle - \frac{\beta}{8\sqrt{2}}\ |011110000\rangle - \frac{\beta}{8\sqrt{2}}$
$|011110001\rangle - \frac{\beta}{8\sqrt{2}}\ |011110010\rangle - \frac{\beta}{8\sqrt{2}}\ |011110011\rangle - \frac{\beta}{8\sqrt{2}}\ |011110100\rangle - \frac{\beta}{8\sqrt{2}}\ |011110101\rangle - \frac{\beta}{8\sqrt{2}}\ |011110110\rangle - \frac{\beta}{8\sqrt{2}}$
$|011110111\rangle - \frac{\beta}{8\sqrt{2}}\ |110111000\rangle - \frac{\beta}{8\sqrt{2}}\ |110111001\rangle - \frac{\beta}{8\sqrt{2}}\ |110111010\rangle - \frac{\beta}{8\sqrt{2}}\ |110111011\rangle - \frac{\beta}{8\sqrt{2}}\ |110111100\rangle - \frac{\beta}{8\sqrt{2}}$
$|110111101\rangle - \frac{\beta}{8\sqrt{2}}\ |110111110\rangle - \frac{\beta}{8\sqrt{2}}\ |110111111\rangle - \frac{\beta}{8\sqrt{2}}\ |111000000\rangle - \frac{\beta}{8\sqrt{2}}\ |111000001\rangle - \frac{\beta}{8\sqrt{2}}\ |111000010\rangle - \frac{\beta}{8\sqrt{2}}$
$|111000011\rangle + \frac{\beta}{8\sqrt{2}}\ |111000100\rangle + \frac{\beta}{8\sqrt{2}}\ |111000101\rangle + \frac{\beta}{8\sqrt{2}}\ |111000110\rangle + \frac{\beta}{8\sqrt{2}}\ |111000111\rangle + \frac{\beta}{8\sqrt{2}}\ |010001000\rangle + \frac{\beta}{8\sqrt{2}}$
$|010001001\rangle + \frac{\beta}{8\sqrt{2}}\ |010001010\rangle + \frac{\beta}{8\sqrt{2}}\ |010001011\rangle - \frac{\beta}{8\sqrt{2}}\ |010001100\rangle - \frac{\beta}{8\sqrt{2}}\ |010001101\rangle - \frac{\beta}{8\sqrt{2}}\ |010001110\rangle - \frac{\beta}{8\sqrt{2}}$
$|010001111\rangle + \frac{\beta}{8\sqrt{2}}\ |101010000\rangle + \frac{\beta}{8\sqrt{2}}\ |101010001\rangle + \frac{\beta}{8\sqrt{2}}\ |101010010\rangle + \frac{\beta}{8\sqrt{2}}\ |101010011\rangle + \frac{\beta}{8\sqrt{2}}\ |101010100\rangle + \frac{\beta}{8\sqrt{2}}$
$|101010101\rangle + \frac{\beta}{8\sqrt{2}}\ |101010110\rangle + \frac{\beta}{8\sqrt{2}}\ |101010111\rangle + \frac{\beta}{8\sqrt{2}}\ |000011000\rangle + \frac{\beta}{8\sqrt{2}}\ |000011001\rangle + \frac{\beta}{8\sqrt{2}}\ |000011010\rangle + \frac{\beta}{8\sqrt{2}}$
$|000011011\rangle + \frac{\beta}{8\sqrt{2}}\ |000011100\rangle + \frac{\beta}{8\sqrt{2}}\ |000011101\rangle + \frac{\beta}{8\sqrt{2}}\ |000011110\rangle + \frac{\beta}{8\sqrt{2}}\ |000011111\rangle.$

- Porte Z(5) :

$|\ \psi_3\ \rangle = \frac{\alpha}{8\sqrt{2}}\ |100000000\rangle + \frac{\alpha}{8\sqrt{2}}\ |100000001\rangle + \frac{\alpha}{8\sqrt{2}}\ |100000010\rangle + \frac{\alpha}{8\sqrt{2}}\ |100000011\rangle - \frac{\alpha}{8\sqrt{2}}\ |100000100\rangle - \frac{\alpha}{8\sqrt{2}}$
$|100000101\rangle - \frac{\alpha}{8\sqrt{2}}\ |100000110\rangle - \frac{\alpha}{8\sqrt{2}}\ |100000111\rangle + \frac{\alpha}{8\sqrt{2}}\ |001001000\rangle + \frac{\alpha}{8\sqrt{2}}\ |001001001\rangle + \frac{\alpha}{8\sqrt{2}}\ |001001010\rangle + \frac{\alpha}{8\sqrt{2}}$
$|001001011\rangle - \frac{\alpha}{8\sqrt{2}}\ |001001100\rangle - \frac{\alpha}{8\sqrt{2}}\ |001001101\rangle - \frac{\alpha}{8\sqrt{2}}\ |001001110\rangle - \frac{\alpha}{8\sqrt{2}}\ |001001111\rangle + \frac{\alpha}{8\sqrt{2}}\ |110010000\rangle + \frac{\alpha}{8\sqrt{2}}$
$|110010001\rangle + \frac{\alpha}{8\sqrt{2}}\ |110010010\rangle + \frac{\alpha}{8\sqrt{2}}\ |110010011\rangle - \frac{\alpha}{8\sqrt{2}}\ |110010100\rangle - \frac{\alpha}{8\sqrt{2}}\ |110010101\rangle - \frac{\alpha}{8\sqrt{2}}\ |110010110\rangle - \frac{\alpha}{8\sqrt{2}}$
$|110010111\rangle - \frac{\alpha}{8\sqrt{2}}\ |011011000\rangle - \frac{\alpha}{8\sqrt{2}}\ |011011001\rangle - \frac{\alpha}{8\sqrt{2}}\ |011011010\rangle - \frac{\alpha}{8\sqrt{2}}\ |011011011\rangle + \frac{\alpha}{8\sqrt{2}}\ |011011100\rangle + \frac{\alpha}{8\sqrt{2}}$
$|011011101\rangle + \frac{\alpha}{8\sqrt{2}}\ |011011110\rangle + \frac{\alpha}{8\sqrt{2}}\ |011011111\rangle + \frac{\alpha}{8\sqrt{2}}\ |010100000\rangle + \frac{\alpha}{8\sqrt{2}}\ |010100001\rangle + \frac{\alpha}{8\sqrt{2}}\ |010100010\rangle + \frac{\alpha}{8\sqrt{2}}$
$|010100011\rangle - \frac{\alpha}{8\sqrt{2}}\ |010100100\rangle - \frac{\alpha}{8\sqrt{2}}\ |010100101\rangle - \frac{\alpha}{8\sqrt{2}}\ |010100110\rangle - \frac{\alpha}{8\sqrt{2}}\ |010100111\rangle + \frac{\alpha}{8\sqrt{2}}\ |111101000\rangle + \frac{\alpha}{8\sqrt{2}}$
$|111101001\rangle + \frac{\alpha}{8\sqrt{2}}\ |111101010\rangle + \frac{\alpha}{8\sqrt{2}}\ |111101011\rangle - \frac{\alpha}{8\sqrt{2}}\ |111101100\rangle - \frac{\alpha}{8\sqrt{2}}\ |111101101\rangle - \frac{\alpha}{8\sqrt{2}}\ |111101110\rangle - \frac{\alpha}{8\sqrt{2}}$
$|111101111\rangle - \frac{\alpha}{8\sqrt{2}}\ |000110000\rangle - \frac{\alpha}{8\sqrt{2}}\ |000110001\rangle - \frac{\alpha}{8\sqrt{2}}\ |000110010\rangle - \frac{\alpha}{8\sqrt{2}}\ |000110011\rangle + \frac{\alpha}{8\sqrt{2}}\ |000110100\rangle + \frac{\alpha}{8\sqrt{2}}$
$|000110101\rangle + \frac{\alpha}{8\sqrt{2}}\ |000110110\rangle + \frac{\alpha}{8\sqrt{2}}\ |000110111\rangle + \frac{\alpha}{8\sqrt{2}}\ |101111000\rangle + \frac{\alpha}{8\sqrt{2}}\ |101111001\rangle + \frac{\alpha}{8\sqrt{2}}\ |101111010\rangle + \frac{\alpha}{8\sqrt{2}}$
$|101111011\rangle - \frac{\alpha}{8\sqrt{2}}\ |101111100\rangle - \frac{\alpha}{8\sqrt{2}}\ |101111101\rangle - \frac{\alpha}{8\sqrt{2}}\ |101111110\rangle - \frac{\alpha}{8\sqrt{2}}\ |101111111\rangle + \frac{\alpha}{8\sqrt{2}}\ |111100000\rangle + \frac{\alpha}{8\sqrt{2}}$
$|111100001\rangle + \frac{\alpha}{8\sqrt{2}}\ |111100010\rangle + \frac{\alpha}{8\sqrt{2}}\ |111100011\rangle - \frac{\alpha}{8\sqrt{2}}\ |111100100\rangle - \frac{\alpha}{8\sqrt{2}}\ |111100101\rangle - \frac{\alpha}{8\sqrt{2}}\ |111100110\rangle - \frac{\alpha}{8\sqrt{2}}$
$|111100111\rangle + \frac{\alpha}{8\sqrt{2}}\ |010101000\rangle + \frac{\alpha}{8\sqrt{2}}\ |010101001\rangle + \frac{\alpha}{8\sqrt{2}}\ |010101010\rangle + \frac{\alpha}{8\sqrt{2}}\ |010101011\rangle - \frac{\alpha}{8\sqrt{2}}\ |010101100\rangle - \frac{\alpha}{8\sqrt{2}}$
$|010101101\rangle - \frac{\alpha}{8\sqrt{2}}\ |010101110\rangle - \frac{\alpha}{8\sqrt{2}}\ |010101111\rangle + \frac{\alpha}{8\sqrt{2}}\ |101110000\rangle + \frac{\alpha}{8\sqrt{2}}\ |101110001\rangle + \frac{\alpha}{8\sqrt{2}}\ |101110010\rangle + \frac{\alpha}{8\sqrt{2}}$
$|101110011\rangle - \frac{\alpha}{8\sqrt{2}}\ |101110100\rangle - \frac{\alpha}{8\sqrt{2}}\ |101110101\rangle - \frac{\alpha}{8\sqrt{2}}\ |101110110\rangle - \frac{\alpha}{8\sqrt{2}}\ |101110111\rangle - \frac{\alpha}{8\sqrt{2}}\ |000111000\rangle - \frac{\alpha}{8\sqrt{2}}$
$|000111001\rangle - \frac{\alpha}{8\sqrt{2}}\ |000111010\rangle - \frac{\alpha}{8\sqrt{2}}\ |000111011\rangle + \frac{\alpha}{8\sqrt{2}}\ |000111100\rangle + \frac{\alpha}{8\sqrt{2}}\ |000111101\rangle + \frac{\alpha}{8\sqrt{2}}\ |000111110\rangle + \frac{\alpha}{8\sqrt{2}}$
$|000111111\rangle + \frac{\alpha}{8\sqrt{2}}\ |001000000\rangle + \frac{\alpha}{8\sqrt{2}}\ |001000001\rangle + \frac{\alpha}{8\sqrt{2}}\ |001000010\rangle + \frac{\alpha}{8\sqrt{2}}\ |001000011\rangle - \frac{\alpha}{8\sqrt{2}}\ |001000100\rangle - \frac{\alpha}{8\sqrt{2}}$
$|001000101\rangle - \frac{\alpha}{8\sqrt{2}}\ |001000110\rangle - \frac{\alpha}{8\sqrt{2}}\ |001000111\rangle + \frac{\alpha}{8\sqrt{2}}\ |100001000\rangle + \frac{\alpha}{8\sqrt{2}}\ |100001001\rangle + \frac{\alpha}{8\sqrt{2}}\ |100001010\rangle + \frac{\alpha}{8\sqrt{2}}$
$|100001011\rangle - \frac{\alpha}{8\sqrt{2}}\ |100001100\rangle - \frac{\alpha}{8\sqrt{2}}\ |100001101\rangle - \frac{\alpha}{8\sqrt{2}}\ |100001110\rangle - \frac{\alpha}{8\sqrt{2}}\ |100001111\rangle - \frac{\alpha}{8\sqrt{2}}\ |011010000\rangle - \frac{\alpha}{8\sqrt{2}}$
$|011010001\rangle - \frac{\alpha}{8\sqrt{2}}\ |011010010\rangle - \frac{\alpha}{8\sqrt{2}}\ |011010011\rangle + \frac{\alpha}{8\sqrt{2}}\ |011010100\rangle + \frac{\alpha}{8\sqrt{2}}\ |011010101\rangle + \frac{\alpha}{8\sqrt{2}}\ |011010110\rangle + \frac{\alpha}{8\sqrt{2}}$
$|011010111\rangle + \frac{\alpha}{8\sqrt{2}}\ |110011000\rangle + \frac{\alpha}{8\sqrt{2}}\ |110011001\rangle + \frac{\alpha}{8\sqrt{2}}\ |110011010\rangle + \frac{\alpha}{8\sqrt{2}}\ |110011011\rangle - \frac{\alpha}{8\sqrt{2}}\ |110011100\rangle - \frac{\alpha}{8\sqrt{2}}$
$|110011101\rangle - \frac{\alpha}{8\sqrt{2}}\ |110011110\rangle - \frac{\alpha}{8\sqrt{2}}\ |110011111\rangle + \frac{\beta}{8\sqrt{2}}\ |010000000\rangle + \frac{\beta}{8\sqrt{2}}\ |010000001\rangle + \frac{\beta}{8\sqrt{2}}\ |010000010\rangle + \frac{\beta}{8\sqrt{2}}$
$|010000011\rangle - \frac{\beta}{8\sqrt{2}}\ |010000100\rangle - \frac{\beta}{8\sqrt{2}}\ |010000101\rangle - \frac{\beta}{8\sqrt{2}}\ |010000110\rangle - \frac{\beta}{8\sqrt{2}}\ |010000111\rangle - \frac{\beta}{8\sqrt{2}}\ |111001000\rangle - \frac{\beta}{8\sqrt{2}}$
$|111001001\rangle - \frac{\beta}{8\sqrt{2}}\ |111001010\rangle - \frac{\beta}{8\sqrt{2}}\ |111001011\rangle + \frac{\beta}{8\sqrt{2}}\ |111001100\rangle + \frac{\beta}{8\sqrt{2}}\ |111001101\rangle + \frac{\beta}{8\sqrt{2}}\ |111001110\rangle + \frac{\beta}{8\sqrt{2}}$
$|111001111\rangle + \frac{\beta}{8\sqrt{2}}\ |000010000\rangle + \frac{\beta}{8\sqrt{2}}\ |000010001\rangle + \frac{\beta}{8\sqrt{2}}\ |000010010\rangle + \frac{\beta}{8\sqrt{2}}\ |000010011\rangle - \frac{\beta}{8\sqrt{2}}\ |000010100\rangle - \frac{\beta}{8\sqrt{2}}$
$|000010101\rangle - \frac{\beta}{8\sqrt{2}}\ |000010110\rangle - \frac{\beta}{8\sqrt{2}}\ |000010111\rangle + \frac{\beta}{8\sqrt{2}}\ |101011000\rangle + \frac{\beta}{8\sqrt{2}}\ |101011001\rangle + \frac{\beta}{8\sqrt{2}}\ |101011010\rangle + \frac{\beta}{8\sqrt{2}}$
$|101011011\rangle - \frac{\beta}{8\sqrt{2}}\ |101011100\rangle - \frac{\beta}{8\sqrt{2}}\ |101011101\rangle - \frac{\beta}{8\sqrt{2}}\ |101011110\rangle - \frac{\beta}{8\sqrt{2}}\ |101011111\rangle + \frac{\beta}{8\sqrt{2}}\ |100100000\rangle + \frac{\beta}{8\sqrt{2}}$
$|100100001\rangle + \frac{\beta}{8\sqrt{2}}\ |100100010\rangle + \frac{\beta}{8\sqrt{2}}\ |100100011\rangle - \frac{\beta}{8\sqrt{2}}\ |100100100\rangle - \frac{\beta}{8\sqrt{2}}\ |100100101\rangle - \frac{\beta}{8\sqrt{2}}\ |100100110\rangle - \frac{\beta}{8\sqrt{2}}$
$|100100111\rangle - \frac{\beta}{8\sqrt{2}}\ |001101000\rangle - \frac{\beta}{8\sqrt{2}}\ |001101001\rangle - \frac{\beta}{8\sqrt{2}}\ |001101010\rangle - \frac{\beta}{8\sqrt{2}}\ |001101011\rangle + \frac{\beta}{8\sqrt{2}}\ |001101100\rangle + \frac{\beta}{8\sqrt{2}}$

$|001101101\rangle+\frac{\beta}{8\sqrt{2}}|001101110\rangle+\frac{\beta}{8\sqrt{2}}|001101111\rangle-\frac{\beta}{8\sqrt{2}}|110110000\rangle-\frac{\beta}{8\sqrt{2}}|110110001\rangle-\frac{\beta}{8\sqrt{2}}|110110010\rangle-\frac{\beta}{8\sqrt{2}}$
$|110110011\rangle+\frac{\beta}{8\sqrt{2}}|110110100\rangle+\frac{\beta}{8\sqrt{2}}|110110101\rangle+\frac{\beta}{8\sqrt{2}}|110110110\rangle+\frac{\beta}{8\sqrt{2}}|110110111\rangle-\frac{\beta}{8\sqrt{2}}|011111000\rangle-\frac{\beta}{8\sqrt{2}}$
$|011111001\rangle-\frac{\beta}{8\sqrt{2}}|011111010\rangle-\frac{\beta}{8\sqrt{2}}|011111011\rangle+\frac{\beta}{8\sqrt{2}}|011111100\rangle+\frac{\beta}{8\sqrt{2}}|011111101\rangle+\frac{\beta}{8\sqrt{2}}|011111110\rangle+\frac{\beta}{8\sqrt{2}}$
$|011111111\rangle-\frac{\beta}{8\sqrt{2}}|001100000\rangle-\frac{\beta}{8\sqrt{2}}|001100001\rangle-\frac{\beta}{8\sqrt{2}}|001100010\rangle-\frac{\beta}{8\sqrt{2}}|001100011\rangle+\frac{\beta}{8\sqrt{2}}|001100100\rangle+\frac{\beta}{8\sqrt{2}}$
$|001100101\rangle+\frac{\beta}{8\sqrt{2}}|001100110\rangle+\frac{\beta}{8\sqrt{2}}|001100111\rangle+\frac{\beta}{8\sqrt{2}}|100101000\rangle+\frac{\beta}{8\sqrt{2}}|100101001\rangle+\frac{\beta}{8\sqrt{2}}|100101010\rangle+\frac{\beta}{8\sqrt{2}}$
$|100101011\rangle-\frac{\beta}{8\sqrt{2}}|100101100\rangle-\frac{\beta}{8\sqrt{2}}|100101101\rangle-\frac{\beta}{8\sqrt{2}}|100101110\rangle-\frac{\beta}{8\sqrt{2}}|100101111\rangle-\frac{\beta}{8\sqrt{2}}|011110000\rangle-\frac{\beta}{8\sqrt{2}}$
$|011110001\rangle-\frac{\beta}{8\sqrt{2}}|011110010\rangle-\frac{\beta}{8\sqrt{2}}|011110011\rangle+\frac{\beta}{8\sqrt{2}}|011110100\rangle+\frac{\beta}{8\sqrt{2}}|011110101\rangle+\frac{\beta}{8\sqrt{2}}|011110110\rangle+\frac{\beta}{8\sqrt{2}}$
$|011110111\rangle-\frac{\beta}{8\sqrt{2}}|110111000\rangle-\frac{\beta}{8\sqrt{2}}|110111001\rangle-\frac{\beta}{8\sqrt{2}}|110111010\rangle-\frac{\beta}{8\sqrt{2}}|110111011\rangle+\frac{\beta}{8\sqrt{2}}|110111100\rangle+\frac{\beta}{8\sqrt{2}}$
$|110111101\rangle+\frac{\beta}{8\sqrt{2}}|110111110\rangle+\frac{\beta}{8\sqrt{2}}|110111111\rangle-\frac{\beta}{8\sqrt{2}}|111000000\rangle-\frac{\beta}{8\sqrt{2}}|111000001\rangle-\frac{\beta}{8\sqrt{2}}|111000010\rangle-\frac{\beta}{8\sqrt{2}}$
$|111000011\rangle+\frac{\beta}{8\sqrt{2}}|111000100\rangle+\frac{\beta}{8\sqrt{2}}|111000101\rangle+\frac{\beta}{8\sqrt{2}}|111000110\rangle+\frac{\beta}{8\sqrt{2}}|111000111\rangle+\frac{\beta}{8\sqrt{2}}|010001000\rangle+\frac{\beta}{8\sqrt{2}}$
$|010001001\rangle+\frac{\beta}{8\sqrt{2}}|010001010\rangle+\frac{\beta}{8\sqrt{2}}|010001011\rangle-\frac{\beta}{8\sqrt{2}}|010001100\rangle-\frac{\beta}{8\sqrt{2}}|010001101\rangle-\frac{\beta}{8\sqrt{2}}|010001110\rangle-\frac{\beta}{8\sqrt{2}}$
$|010001111\rangle+\frac{\beta}{8\sqrt{2}}|101010000\rangle+\frac{\beta}{8\sqrt{2}}|101010001\rangle+\frac{\beta}{8\sqrt{2}}|101010010\rangle+\frac{\beta}{8\sqrt{2}}|101010011\rangle-\frac{\beta}{8\sqrt{2}}|101010100\rangle-\frac{\beta}{8\sqrt{2}}$
$|101010101\rangle-\frac{\beta}{8\sqrt{2}}|101010110\rangle-\frac{\beta}{8\sqrt{2}}|101010111\rangle+\frac{\beta}{8\sqrt{2}}|000011000\rangle+\frac{\beta}{8\sqrt{2}}|000011001\rangle+\frac{\beta}{8\sqrt{2}}|000011010\rangle+\frac{\beta}{8\sqrt{2}}$
$|000011011\rangle-\frac{\beta}{8\sqrt{2}}|000011100\rangle-\frac{\beta}{8\sqrt{2}}|000011101\rangle-\frac{\beta}{8\sqrt{2}}|000011110\rangle-\frac{\beta}{8\sqrt{2}}|000011111\rangle.$

✓ M_2 :

- Porte X(2) :

$|\psi_3\rangle=\frac{\alpha}{8\sqrt{2}}|100000000\rangle+\frac{\alpha}{8\sqrt{2}}|100000001\rangle+\frac{\alpha}{8\sqrt{2}}|110000010\rangle+\frac{\alpha}{8\sqrt{2}}|110000011\rangle-\frac{\alpha}{8\sqrt{2}}|100000100\rangle-\frac{\alpha}{8\sqrt{2}}$
$|100000101\rangle-\frac{\alpha}{8\sqrt{2}}|110000110\rangle-\frac{\alpha}{8\sqrt{2}}|110000111\rangle+\frac{\alpha}{8\sqrt{2}}|001001000\rangle+\frac{\alpha}{8\sqrt{2}}|001001001\rangle+\frac{\alpha}{8\sqrt{2}}|011001010\rangle+\frac{\alpha}{8\sqrt{2}}$
$|011001011\rangle-\frac{\alpha}{8\sqrt{2}}|001001100\rangle-\frac{\alpha}{8\sqrt{2}}|001001101\rangle-\frac{\alpha}{8\sqrt{2}}|011001110\rangle-\frac{\alpha}{8\sqrt{2}}|011001111\rangle+\frac{\alpha}{8\sqrt{2}}|110010000\rangle+\frac{\alpha}{8\sqrt{2}}$
$|110010001\rangle+\frac{\alpha}{8\sqrt{2}}|100010010\rangle+\frac{\alpha}{8\sqrt{2}}|100010011\rangle-\frac{\alpha}{8\sqrt{2}}|110010100\rangle-\frac{\alpha}{8\sqrt{2}}|110010101\rangle-\frac{\alpha}{8\sqrt{2}}|100010110\rangle-\frac{\alpha}{8\sqrt{2}}$
$|100010111\rangle-\frac{\alpha}{8\sqrt{2}}|011011000\rangle-\frac{\alpha}{8\sqrt{2}}|011011001\rangle-\frac{\alpha}{8\sqrt{2}}|001011010\rangle-\frac{\alpha}{8\sqrt{2}}|001011011\rangle+\frac{\alpha}{8\sqrt{2}}|011011100\rangle+\frac{\alpha}{8\sqrt{2}}$
$|011011101\rangle+\frac{\alpha}{8\sqrt{2}}|001011110\rangle+\frac{\alpha}{8\sqrt{2}}|001011111\rangle+\frac{\alpha}{8\sqrt{2}}|010100000\rangle+\frac{\alpha}{8\sqrt{2}}|010100001\rangle+\frac{\alpha}{8\sqrt{2}}|000100010\rangle+\frac{\alpha}{8\sqrt{2}}$
$|000100011\rangle-\frac{\alpha}{8\sqrt{2}}|010100100\rangle-\frac{\alpha}{8\sqrt{2}}|010100101\rangle-\frac{\alpha}{8\sqrt{2}}|000100110\rangle-\frac{\alpha}{8\sqrt{2}}|000100111\rangle+\frac{\alpha}{8\sqrt{2}}|111101000\rangle+\frac{\alpha}{8\sqrt{2}}$
$|111101001\rangle+\frac{\alpha}{8\sqrt{2}}|101101010\rangle+\frac{\alpha}{8\sqrt{2}}|101101011\rangle-\frac{\alpha}{8\sqrt{2}}|111101100\rangle-\frac{\alpha}{8\sqrt{2}}|111101101\rangle-\frac{\alpha}{8\sqrt{2}}|101101110\rangle-\frac{\alpha}{8\sqrt{2}}$
$|101101111\rangle-\frac{\alpha}{8\sqrt{2}}|000110000\rangle-\frac{\alpha}{8\sqrt{2}}|000110001\rangle-\frac{\alpha}{8\sqrt{2}}|010110010\rangle-\frac{\alpha}{8\sqrt{2}}|010110011\rangle+\frac{\alpha}{8\sqrt{2}}|000110100\rangle+\frac{\alpha}{8\sqrt{2}}$
$|000110101\rangle+\frac{\alpha}{8\sqrt{2}}|010110110\rangle+\frac{\alpha}{8\sqrt{2}}|010110111\rangle+\frac{\alpha}{8\sqrt{2}}|101111000\rangle+\frac{\alpha}{8\sqrt{2}}|101111001\rangle+\frac{\alpha}{8\sqrt{2}}|111111010\rangle+\frac{\alpha}{8\sqrt{2}}$
$|111111011\rangle-\frac{\alpha}{8\sqrt{2}}|101111100\rangle-\frac{\alpha}{8\sqrt{2}}|101111101\rangle-\frac{\alpha}{8\sqrt{2}}|111111110\rangle-\frac{\alpha}{8\sqrt{2}}|111111111\rangle+\frac{\alpha}{8\sqrt{2}}|111100000\rangle+\frac{\alpha}{8\sqrt{2}}$
$|111100001\rangle+\frac{\alpha}{8\sqrt{2}}|101100010\rangle+\frac{\alpha}{8\sqrt{2}}|101100011\rangle-\frac{\alpha}{8\sqrt{2}}|111100100\rangle-\frac{\alpha}{8\sqrt{2}}|111100101\rangle-\frac{\alpha}{8\sqrt{2}}|101100110\rangle-\frac{\alpha}{8\sqrt{2}}$
$|101100111\rangle+\frac{\alpha}{8\sqrt{2}}|010101000\rangle+\frac{\alpha}{8\sqrt{2}}|010101001\rangle+\frac{\alpha}{8\sqrt{2}}|000101010\rangle+\frac{\alpha}{8\sqrt{2}}|000101011\rangle-\frac{\alpha}{8\sqrt{2}}|010101100\rangle-\frac{\alpha}{8\sqrt{2}}$
$|010101101\rangle-\frac{\alpha}{8\sqrt{2}}|000101110\rangle-\frac{\alpha}{8\sqrt{2}}|000101111\rangle+\frac{\alpha}{8\sqrt{2}}|101110000\rangle+\frac{\alpha}{8\sqrt{2}}|101110001\rangle+\frac{\alpha}{8\sqrt{2}}|111110010\rangle+\frac{\alpha}{8\sqrt{2}}$
$|111110011\rangle-\frac{\alpha}{8\sqrt{2}}|101110100\rangle-\frac{\alpha}{8\sqrt{2}}|101110101\rangle-\frac{\alpha}{8\sqrt{2}}|111110110\rangle-\frac{\alpha}{8\sqrt{2}}|111110111\rangle-\frac{\alpha}{8\sqrt{2}}|000111000\rangle-\frac{\alpha}{8\sqrt{2}}$
$|000111001\rangle-\frac{\alpha}{8\sqrt{2}}|010111010\rangle-\frac{\alpha}{8\sqrt{2}}|010111011\rangle+\frac{\alpha}{8\sqrt{2}}|000111100\rangle+\frac{\alpha}{8\sqrt{2}}|000111101\rangle+\frac{\alpha}{8\sqrt{2}}|010111110\rangle+\frac{\alpha}{8\sqrt{2}}$
$|010111111\rangle+\frac{\alpha}{8\sqrt{2}}|001000000\rangle+\frac{\alpha}{8\sqrt{2}}|001000001\rangle+\frac{\alpha}{8\sqrt{2}}|011000010\rangle+\frac{\alpha}{8\sqrt{2}}|011000011\rangle-\frac{\alpha}{8\sqrt{2}}|001000100\rangle-\frac{\alpha}{8\sqrt{2}}$
$|001000101\rangle-\frac{\alpha}{8\sqrt{2}}|011000110\rangle-\frac{\alpha}{8\sqrt{2}}|011000111\rangle+\frac{\alpha}{8\sqrt{2}}|100001000\rangle+\frac{\alpha}{8\sqrt{2}}|100001001\rangle+\frac{\alpha}{8\sqrt{2}}|110001010\rangle+\frac{\alpha}{8\sqrt{2}}$
$|110001011\rangle-\frac{\alpha}{8\sqrt{2}}|100001100\rangle-\frac{\alpha}{8\sqrt{2}}|100001101\rangle-\frac{\alpha}{8\sqrt{2}}|110001110\rangle-\frac{\alpha}{8\sqrt{2}}|110001111\rangle-\frac{\alpha}{8\sqrt{2}}|011010000\rangle-\frac{\alpha}{8\sqrt{2}}$
$|011010001\rangle-\frac{\alpha}{8\sqrt{2}}|001010010\rangle-\frac{\alpha}{8\sqrt{2}}|001010011\rangle+\frac{\alpha}{8\sqrt{2}}|011010100\rangle+\frac{\alpha}{8\sqrt{2}}|011010101\rangle+\frac{\alpha}{8\sqrt{2}}|001010110\rangle+\frac{\alpha}{8\sqrt{2}}$
$|001010111\rangle+\frac{\alpha}{8\sqrt{2}}|110011000\rangle+\frac{\alpha}{8\sqrt{2}}|110011001\rangle+\frac{\alpha}{8\sqrt{2}}|100011010\rangle+\frac{\alpha}{8\sqrt{2}}|100011011\rangle-\frac{\alpha}{8\sqrt{2}}|110011100\rangle-\frac{\alpha}{8\sqrt{2}}$
$|110011101\rangle-\frac{\alpha}{8\sqrt{2}}|100011110\rangle-\frac{\alpha}{8\sqrt{2}}|100011111\rangle+\frac{\beta}{8\sqrt{2}}|010000000\rangle+\frac{\beta}{8\sqrt{2}}|010000001\rangle+\frac{\beta}{8\sqrt{2}}|000000010\rangle+\frac{\beta}{8\sqrt{2}}$

$|000000011\rangle$- $\frac{\beta}{8\sqrt{2}}$ $|010000100\rangle$- $\frac{\beta}{8\sqrt{2}}$ $|010000101\rangle$- $\frac{\beta}{8\sqrt{2}}$ $|000000110\rangle$- $\frac{\beta}{8\sqrt{2}}$ $|000000111\rangle$- $\frac{\beta}{8\sqrt{2}}$ $|111001000\rangle$- $\frac{\beta}{8\sqrt{2}}$
$|111001001\rangle$- $\frac{\beta}{8\sqrt{2}}$ $|101001010\rangle$- $\frac{\beta}{8\sqrt{2}}$ $|101001011\rangle$+ $\frac{\beta}{8\sqrt{2}}$ $|111001100\rangle$+ $\frac{\beta}{8\sqrt{2}}$ $|111001101\rangle$+ $\frac{\beta}{8\sqrt{2}}$ $|101001110\rangle$+ $\frac{\beta}{8\sqrt{2}}$
$|101001111\rangle$+ $\frac{\beta}{8\sqrt{2}}$ $|000010000\rangle$+ $\frac{\beta}{8\sqrt{2}}$ $|000010001\rangle$+ $\frac{\beta}{8\sqrt{2}}$ $|010010010\rangle$+ $\frac{\beta}{8\sqrt{2}}$ $|010010011\rangle$- $\frac{\beta}{8\sqrt{2}}$ $|000010100\rangle$- $\frac{\beta}{8\sqrt{2}}$
$|000010101\rangle$- $\frac{\beta}{8\sqrt{2}}$ $|010010110\rangle$- $\frac{\beta}{8\sqrt{2}}$ $|010010111\rangle$+ $\frac{\beta}{8\sqrt{2}}$ $|101011000\rangle$+ $\frac{\beta}{8\sqrt{2}}$ $|101011001\rangle$+ $\frac{\beta}{8\sqrt{2}}$ $|111011010\rangle$+ $\frac{\beta}{8\sqrt{2}}$
$|111011011\rangle$- $\frac{\beta}{8\sqrt{2}}$ $|101011100\rangle$- $\frac{\beta}{8\sqrt{2}}$ $|101011101\rangle$- $\frac{\beta}{8\sqrt{2}}$ $|111011110\rangle$- $\frac{\beta}{8\sqrt{2}}$ $|111011111\rangle$+ $\frac{\beta}{8\sqrt{2}}$ $|100100000\rangle$+ $\frac{\beta}{8\sqrt{2}}$
$|100100001\rangle$+ $\frac{\beta}{8\sqrt{2}}$ $|110100010\rangle$+ $\frac{\beta}{8\sqrt{2}}$ $|110100011\rangle$- $\frac{\beta}{8\sqrt{2}}$ $|100100100\rangle$- $\frac{\beta}{8\sqrt{2}}$ $|100100101\rangle$- $\frac{\beta}{8\sqrt{2}}$ $|110100110\rangle$- $\frac{\beta}{8\sqrt{2}}$
$|110100111\rangle$- $\frac{\beta}{8\sqrt{2}}$ $|001101000\rangle$- $\frac{\beta}{8\sqrt{2}}$ $|001101001\rangle$- $\frac{\beta}{8\sqrt{2}}$ $|011101010\rangle$- $\frac{\beta}{8\sqrt{2}}$ $|011101011\rangle$+ $\frac{\beta}{8\sqrt{2}}$ $|001101100\rangle$+ $\frac{\beta}{8\sqrt{2}}$
$|001101101\rangle$+ $\frac{\beta}{8\sqrt{2}}$ $|011101110\rangle$+ $\frac{\beta}{8\sqrt{2}}$ $|011101111\rangle$- $\frac{\beta}{8\sqrt{2}}$ $|110110000\rangle$- $\frac{\beta}{8\sqrt{2}}$ $|110110001\rangle$- $\frac{\beta}{8\sqrt{2}}$ $|100110010\rangle$- $\frac{\beta}{8\sqrt{2}}$
$|100110011\rangle$+ $\frac{\beta}{8\sqrt{2}}$ $|110110100\rangle$+ $\frac{\beta}{8\sqrt{2}}$ $|110110101\rangle$+ $\frac{\beta}{8\sqrt{2}}$ $|100110110\rangle$+ $\frac{\beta}{8\sqrt{2}}$ $|100110111\rangle$- $\frac{\beta}{8\sqrt{2}}$ $|011111000\rangle$- $\frac{\beta}{8\sqrt{2}}$
$|011111001\rangle$- $\frac{\beta}{8\sqrt{2}}$ $|001111010\rangle$- $\frac{\beta}{8\sqrt{2}}$ $|001111011\rangle$+ $\frac{\beta}{8\sqrt{2}}$ $|011111100\rangle$+ $\frac{\beta}{8\sqrt{2}}$ $|011111101\rangle$+ $\frac{\beta}{8\sqrt{2}}$ $|001111110\rangle$+ $\frac{\beta}{8\sqrt{2}}$
$|001111111\rangle$- $\frac{\beta}{8\sqrt{2}}$ $|001100000\rangle$- $\frac{\beta}{8\sqrt{2}}$ $|001100001\rangle$- $\frac{\beta}{8\sqrt{2}}$ $|011100010\rangle$- $\frac{\beta}{8\sqrt{2}}$ $|011100011\rangle$+ $\frac{\beta}{8\sqrt{2}}$ $|001100100\rangle$+ $\frac{\beta}{8\sqrt{2}}$
$|001100101\rangle$+ $\frac{\beta}{8\sqrt{2}}$ $|011100110\rangle$+ $\frac{\beta}{8\sqrt{2}}$ $|011100111\rangle$+ $\frac{\beta}{8\sqrt{2}}$ $|100101000\rangle$+ $\frac{\beta}{8\sqrt{2}}$ $|100101001\rangle$+ $\frac{\beta}{8\sqrt{2}}$ $|110101010\rangle$+ $\frac{\beta}{8\sqrt{2}}$
$|110101011\rangle$- $\frac{\beta}{8\sqrt{2}}$ $|100101100\rangle$- $\frac{\beta}{8\sqrt{2}}$ $|100101101\rangle$- $\frac{\beta}{8\sqrt{2}}$ $|110101110\rangle$- $\frac{\beta}{8\sqrt{2}}$ $|110101111\rangle$- $\frac{\beta}{8\sqrt{2}}$ $|011110000\rangle$- $\frac{\beta}{8\sqrt{2}}$
$|011110001\rangle$- $\frac{\beta}{8\sqrt{2}}$ $|001110010\rangle$- $\frac{\beta}{8\sqrt{2}}$ $|001110011\rangle$+ $\frac{\beta}{8\sqrt{2}}$ $|011110100\rangle$+ $\frac{\beta}{8\sqrt{2}}$ $|011110101\rangle$+ $\frac{\beta}{8\sqrt{2}}$ $|001110110\rangle$+ $\frac{\beta}{8\sqrt{2}}$
$|001110111\rangle$- $\frac{\beta}{8\sqrt{2}}$ $|110111000\rangle$- $\frac{\beta}{8\sqrt{2}}$ $|110111001\rangle$- $\frac{\beta}{8\sqrt{2}}$ $|100111010\rangle$- $\frac{\beta}{8\sqrt{2}}$ $|100111011\rangle$+ $\frac{\beta}{8\sqrt{2}}$ $|110111100\rangle$+ $\frac{\beta}{8\sqrt{2}}$
$|110111101\rangle$+ $\frac{\beta}{8\sqrt{2}}$ $|100111110\rangle$+ $\frac{\beta}{8\sqrt{2}}$ $|100111111\rangle$- $\frac{\beta}{8\sqrt{2}}$ $|111000000\rangle$- $\frac{\beta}{8\sqrt{2}}$ $|111000001\rangle$- $\frac{\beta}{8\sqrt{2}}$ $|101000010\rangle$- $\frac{\beta}{8\sqrt{2}}$
$|101000011\rangle$+ $\frac{\beta}{8\sqrt{2}}$ $|111000100\rangle$+ $\frac{\beta}{8\sqrt{2}}$ $|111000101\rangle$+ $\frac{\beta}{8\sqrt{2}}$ $|101000110\rangle$+ $\frac{\beta}{8\sqrt{2}}$ $|101000111\rangle$+ $\frac{\beta}{8\sqrt{2}}$ $|010001000\rangle$+ $\frac{\beta}{8\sqrt{2}}$
$|010001001\rangle$+ $\frac{\beta}{8\sqrt{2}}$ $|000001010\rangle$+ $\frac{\beta}{8\sqrt{2}}$ $|000001011\rangle$- $\frac{\beta}{8\sqrt{2}}$ $|010001100\rangle$- $\frac{\beta}{8\sqrt{2}}$ $|010001101\rangle$- $\frac{\beta}{8\sqrt{2}}$ $|000001110\rangle$- $\frac{\beta}{8\sqrt{2}}$
$|000001111\rangle$+ $\frac{\beta}{8\sqrt{2}}$ $|101010000\rangle$+ $\frac{\beta}{8\sqrt{2}}$ $|101010001\rangle$+ $\frac{\beta}{8\sqrt{2}}$ $|111010010\rangle$+ $\frac{\beta}{8\sqrt{2}}$ $|111010011\rangle$- $\frac{\beta}{8\sqrt{2}}$ $|101010100\rangle$- $\frac{\beta}{8\sqrt{2}}$
$|101010101\rangle$- $\frac{\beta}{8\sqrt{2}}$ $|111010110\rangle$- $\frac{\beta}{8\sqrt{2}}$ $|111010111\rangle$+ $\frac{\beta}{8\sqrt{2}}$ $|000011000\rangle$+ $\frac{\beta}{8\sqrt{2}}$ $|000011001\rangle$+ $\frac{\beta}{8\sqrt{2}}$ $|010011010\rangle$+ $\frac{\beta}{8\sqrt{2}}$
$|010011011\rangle$-$\frac{\beta}{8\sqrt{2}}$ $|000011100\rangle$-$\frac{\beta}{8\sqrt{2}}$ $|000011101\rangle$-$\frac{\beta}{8\sqrt{2}}$ $|010011110\rangle$-$\frac{\beta}{8\sqrt{2}}$ $|010011111\rangle$.

- Porte Z(3) :

$|\psi_3\rangle$ =$\frac{\alpha}{8\sqrt{2}}$ $|100000000\rangle$+$\frac{\alpha}{8\sqrt{2}}$ $|100000001\rangle$+$\frac{\alpha}{8\sqrt{2}}$ $|110000010\rangle$+$\frac{\alpha}{8\sqrt{2}}$ $|110000011\frac{\alpha}{8\sqrt{2}}$ $|100000100\rangle$-$\frac{\alpha}{8\sqrt{2}}$ $|100000101\rangle$-
$\frac{\alpha}{8\sqrt{2}}$ $|110000110\rangle$-$\frac{\alpha}{8\sqrt{2}}$ $|110000111\rangle$+$\frac{\alpha}{8\sqrt{2}}$ $|001001000\rangle$+$\frac{\alpha}{8\sqrt{2}}$ $|001001001\rangle$-$\frac{\alpha}{8\sqrt{2}}$ $|011001010\rangle$-$\frac{\alpha}{8\sqrt{2}}$ $|011001011\rangle$-$\frac{\alpha}{8\sqrt{2}}$
$|001001100\rangle$-$\frac{\alpha}{8\sqrt{2}}$ $|001001101\rangle$+$\frac{\alpha}{8\sqrt{2}}$ $|011001110\rangle$+$\frac{\alpha}{8\sqrt{2}}$ $|011001111\rangle$+$\frac{\alpha}{8\sqrt{2}}$ $|110010000\rangle$+$\frac{\alpha}{8\sqrt{2}}$ $|110010001\rangle$+$\frac{\alpha}{8\sqrt{2}}$
$|100010010\rangle$+$\frac{\alpha}{8\sqrt{2}}$ $|100010011\rangle$-$\frac{\alpha}{8\sqrt{2}}$ $|110010100\rangle$-$\frac{\alpha}{8\sqrt{2}}$ $|110010101\rangle$-$\frac{\alpha}{8\sqrt{2}}$ $|100010110\rangle$-$\frac{\alpha}{8\sqrt{2}}$ $|100010111\rangle$-$\frac{\alpha}{8\sqrt{2}}$
$|011011000\rangle$-$\frac{\alpha}{8\sqrt{2}}$ $|011011001\rangle$+$\frac{\alpha}{8\sqrt{2}}$ $|001011010\rangle$+$\frac{\alpha}{8\sqrt{2}}$ $|001011011\rangle$+$\frac{\alpha}{8\sqrt{2}}$ $|011011100\rangle$+$\frac{\alpha}{8\sqrt{2}}$ $|011011101\rangle$-$\frac{\alpha}{8\sqrt{2}}$
$|001011110\rangle$-$\frac{\alpha}{8\sqrt{2}}$ $|001011111\rangle$+$\frac{\alpha}{8\sqrt{2}}$ $|010100000\rangle$+$\frac{\alpha}{8\sqrt{2}}$ $|010100001\rangle$+$\frac{\alpha}{8\sqrt{2}}$ $|000100010\rangle$+$\frac{\alpha}{8\sqrt{2}}$ $|000100011\rangle$-$\frac{\alpha}{8\sqrt{2}}$
$|010100100\rangle$-$\frac{\alpha}{8\sqrt{2}}$ $|010100101\rangle$-$\frac{\alpha}{8\sqrt{2}}$ $|000100110\rangle$-$\frac{\alpha}{8\sqrt{2}}$ $|000100111\rangle$+$\frac{\alpha}{8\sqrt{2}}$ $|111101000\rangle$+$\frac{\alpha}{8\sqrt{2}}$ $|111101001\rangle$-$\frac{\alpha}{8\sqrt{2}}$
$|101101010\rangle$-$\frac{\alpha}{8\sqrt{2}}$ $|101101011\rangle$-$\frac{\alpha}{8\sqrt{2}}$ $|111101100\rangle$-$\frac{\alpha}{8\sqrt{2}}$ $|111101101\rangle$+$\frac{\alpha}{8\sqrt{2}}$ $|101101110\rangle$+$\frac{\alpha}{8\sqrt{2}}$ $|101101111\rangle$-$\frac{\alpha}{8\sqrt{2}}$
$|000110000\rangle$-$\frac{\alpha}{8\sqrt{2}}$ $|000110001\rangle$-$\frac{\alpha}{8\sqrt{2}}$ $|010110010\rangle$-$\frac{\alpha}{8\sqrt{2}}$ $|010110011\rangle$+$\frac{\alpha}{8\sqrt{2}}$ $|000110100\rangle$+$\frac{\alpha}{8\sqrt{2}}$ $|000110101\rangle$+$\frac{\alpha}{8\sqrt{2}}$
$|010110110\rangle$+$\frac{\alpha}{8\sqrt{2}}$ $|010110111\rangle$+$\frac{\alpha}{8\sqrt{2}}$ $|101111000\rangle$+$\frac{\alpha}{8\sqrt{2}}$ $|101111001\rangle$-$\frac{\alpha}{8\sqrt{2}}$ $|111111010\rangle$-$\frac{\alpha}{8\sqrt{2}}$ $|111111011\rangle$-$\frac{\alpha}{8\sqrt{2}}$
$|101111100\rangle$-$\frac{\alpha}{8\sqrt{2}}$ $|101111101\rangle$+$\frac{\alpha}{8\sqrt{2}}$ $|111111110\rangle$+$\frac{\alpha}{8\sqrt{2}}$ $|111111111\rangle$+$\frac{\alpha}{8\sqrt{2}}$ $|111100000\rangle$+$\frac{\alpha}{8\sqrt{2}}$ $|111100001\rangle$-$\frac{\alpha}{8\sqrt{2}}$
$|101100010\rangle$-$\frac{\alpha}{8\sqrt{2}}$ $|101100011\rangle$-$\frac{\alpha}{8\sqrt{2}}$ $|111100100\rangle$-$\frac{\alpha}{8\sqrt{2}}$ $|111100101\rangle$+$\frac{\alpha}{8\sqrt{2}}$ $|101100110\rangle$+$\frac{\alpha}{8\sqrt{2}}$ $|101100111\rangle$+$\frac{\alpha}{8\sqrt{2}}$
$|010101000\rangle$+$\frac{\alpha}{8\sqrt{2}}$ $|010101001\rangle$+$\frac{\alpha}{8\sqrt{2}}$ $|000101010\rangle$+$\frac{\alpha}{8\sqrt{2}}$ $|000101011\rangle$-$\frac{\alpha}{8\sqrt{2}}$ $|010101100\rangle$-$\frac{\alpha}{8\sqrt{2}}$ $|010101101\rangle$-$\frac{\alpha}{8\sqrt{2}}$
$|000101110\rangle$-$\frac{\alpha}{8\sqrt{2}}$ $|000101111\rangle$+$\frac{\alpha}{8\sqrt{2}}$ $|101110000\rangle$+$\frac{\alpha}{8\sqrt{2}}$ $|101110001\rangle$-$\frac{\alpha}{8\sqrt{2}}$ $|111110010\rangle$-$\frac{\alpha}{8\sqrt{2}}$ $|111110011\rangle$-$\frac{\alpha}{8\sqrt{2}}$

$|101110100\rangle - \frac{\alpha}{8\sqrt{2}}\ |101110101\rangle + \frac{\alpha}{8\sqrt{2}}\ |111110110\rangle + \frac{\alpha}{8\sqrt{2}}\ |111110111\rangle - \frac{\alpha}{8\sqrt{2}}\ |000111000\rangle - \frac{\alpha}{8\sqrt{2}}\ |000111001\rangle - \frac{\alpha}{8\sqrt{2}}$
$|010111010\rangle - \frac{\alpha}{8\sqrt{2}}\ |010111011\rangle + \frac{\alpha}{8\sqrt{2}}\ |000111100\rangle + \frac{\alpha}{8\sqrt{2}}\ |000111101\rangle + \frac{\alpha}{8\sqrt{2}}\ |010111110\rangle + \frac{\alpha}{8\sqrt{2}}\ |010111111\rangle + \frac{\alpha}{8\sqrt{2}}$
$|001000000\rangle + \frac{\alpha}{8\sqrt{2}}\ |001000001\rangle - \frac{\alpha}{8\sqrt{2}}\ |011000010\rangle - \frac{\alpha}{8\sqrt{2}}\ |011000011\rangle - \frac{\alpha}{8\sqrt{2}}\ |001000100\rangle - \frac{\alpha}{8\sqrt{2}}\ |001000101\rangle + \frac{\alpha}{8\sqrt{2}}$
$|011000110\rangle + \frac{\alpha}{8\sqrt{2}}\ |011000111\rangle + \frac{\alpha}{8\sqrt{2}}\ |100001000\rangle + \frac{\alpha}{8\sqrt{2}}\ |100001001\rangle + \frac{\alpha}{8\sqrt{2}}\ |110001010\rangle + \frac{\alpha}{8\sqrt{2}}\ |110001011\rangle - \frac{\alpha}{8\sqrt{2}}$
$|100001100\rangle - \frac{\alpha}{8\sqrt{2}}\ |100001101\rangle - \frac{\alpha}{8\sqrt{2}}\ |110001110\rangle - \frac{\alpha}{8\sqrt{2}}\ |110001111\rangle - \frac{\alpha}{8\sqrt{2}}\ |011010000\rangle - \frac{\alpha}{8\sqrt{2}}\ |011010001\rangle + \frac{\alpha}{8\sqrt{2}}$
$|001010010\rangle + \frac{\alpha}{8\sqrt{2}}\ |001010011\rangle + \frac{\alpha}{8\sqrt{2}}\ |011010100\rangle + \frac{\alpha}{8\sqrt{2}}\ |011010101\rangle - \frac{\alpha}{8\sqrt{2}}\ |001010110\rangle - \frac{\alpha}{8\sqrt{2}}\ |001010111\rangle + \frac{\alpha}{8\sqrt{2}}$
$|110011000\rangle + \frac{\alpha}{8\sqrt{2}}\ |110011001\rangle + \frac{\alpha}{8\sqrt{2}}\ |100011010\rangle + \frac{\alpha}{8\sqrt{2}}\ |100011011\rangle - \frac{\alpha}{8\sqrt{2}}\ |110011100\rangle - \frac{\alpha}{8\sqrt{2}}\ |110011101\rangle - \frac{\alpha}{8\sqrt{2}}$
$|100011110\rangle - \frac{\alpha}{8\sqrt{2}}\ |100011111\rangle + \frac{\beta}{8\sqrt{2}}\ |010000000\rangle + \frac{\beta}{8\sqrt{2}}\ |010000001\rangle + \frac{\beta}{8\sqrt{2}}\ |000000010\rangle + \frac{\beta}{8\sqrt{2}}\ |000000011\rangle - \frac{\beta}{8\sqrt{2}}$
$|010000100\rangle - \frac{\beta}{8\sqrt{2}}\ |010000101\rangle - \frac{\beta}{8\sqrt{2}}\ |000000110\rangle - \frac{\beta}{8\sqrt{2}}\ |000000111\rangle - \frac{\beta}{8\sqrt{2}}\ |111001000\rangle - \frac{\beta}{8\sqrt{2}}\ |111001001\rangle + \frac{\beta}{8\sqrt{2}}$
$|101001010\rangle + \frac{\beta}{8\sqrt{2}}\ |101001011\rangle + \frac{\beta}{8\sqrt{2}}\ |111001100\rangle + \frac{\beta}{8\sqrt{2}}\ |111001101\rangle - \frac{\beta}{8\sqrt{2}}\ |101001110\rangle - \frac{\beta}{8\sqrt{2}}\ |101001111\rangle + \frac{\beta}{8\sqrt{2}}$
$|000010000\rangle + \frac{\beta}{8\sqrt{2}}\ |000010001\rangle + \frac{\beta}{8\sqrt{2}}\ |010010010\rangle + \frac{\beta}{8\sqrt{2}}\ |010010011\rangle - \frac{\beta}{8\sqrt{2}}\ |000010100\rangle - \frac{\beta}{8\sqrt{2}}\ |000010101\rangle - \frac{\beta}{8\sqrt{2}}$
$|010010110\rangle - \frac{\beta}{8\sqrt{2}}\ |010010111\rangle + \frac{\beta}{8\sqrt{2}}\ |101011000\rangle + \frac{\beta}{8\sqrt{2}}\ |101011001\rangle - \frac{\beta}{8\sqrt{2}}\ |111011010\rangle - \frac{\beta}{8\sqrt{2}}\ |111011011\rangle - \frac{\beta}{8\sqrt{2}}$
$|101011100\rangle - \frac{\beta}{8\sqrt{2}}\ |101011101\rangle + \frac{\beta}{8\sqrt{2}}\ |111011110\rangle + \frac{\beta}{8\sqrt{2}}\ |111011111\rangle + \frac{\beta}{8\sqrt{2}}\ |100100000\rangle + \frac{\beta}{8\sqrt{2}}\ |100100001\rangle + \frac{\beta}{8\sqrt{2}}$
$|110100010\rangle + \frac{\beta}{8\sqrt{2}}\ |110100011\rangle - \frac{\beta}{8\sqrt{2}}\ |100100100\rangle - \frac{\beta}{8\sqrt{2}}\ |100100101\rangle - \frac{\beta}{8\sqrt{2}}\ |110100110\rangle - \frac{\beta}{8\sqrt{2}}\ |110100111\rangle - \frac{\beta}{8\sqrt{2}}$
$|001101000\rangle - \frac{\beta}{8\sqrt{2}}\ |001101001\rangle + \frac{\beta}{8\sqrt{2}}\ |011101010\rangle + \frac{\beta}{8\sqrt{2}}\ |011101011\rangle + \frac{\beta}{8\sqrt{2}}\ |001101100\rangle + \frac{\beta}{8\sqrt{2}}\ |001101101\rangle - \frac{\beta}{8\sqrt{2}}$
$|011101110\rangle - \frac{\beta}{8\sqrt{2}}\ |011101111\rangle - \frac{\beta}{8\sqrt{2}}\ |110110000\rangle - \frac{\beta}{8\sqrt{2}}\ |110110001\rangle - \frac{\beta}{8\sqrt{2}}\ |100110010\rangle - \frac{\beta}{8\sqrt{2}}\ |100110011\rangle + \frac{\beta}{8\sqrt{2}}$
$|110110100\rangle + \frac{\beta}{8\sqrt{2}}\ |110110101\rangle + \frac{\beta}{8\sqrt{2}}\ |100110110\rangle + \frac{\beta}{8\sqrt{2}}\ |100110111\rangle - \frac{\beta}{8\sqrt{2}}\ |011111000\rangle - \frac{\beta}{8\sqrt{2}}\ |011111001\rangle + \frac{\beta}{8\sqrt{2}}$
$|001111010\rangle + \frac{\beta}{8\sqrt{2}}\ |001111011\rangle + \frac{\beta}{8\sqrt{2}}\ |011111100\rangle + \frac{\beta}{8\sqrt{2}}\ |011111101\rangle - \frac{\beta}{8\sqrt{2}}\ |001111110\rangle - \frac{\beta}{8\sqrt{2}}\ |001111111\rangle - \frac{\beta}{8\sqrt{2}}$
$|001100000\rangle - \frac{\beta}{8\sqrt{2}}\ |001100001\rangle + \frac{\beta}{8\sqrt{2}}\ |011100010\rangle + \frac{\beta}{8\sqrt{2}}\ |011100011\rangle + \frac{\beta}{8\sqrt{2}}\ |001100100\rangle + \frac{\beta}{8\sqrt{2}}\ |001100101\rangle - \frac{\beta}{8\sqrt{2}}$
$|011100110\rangle - \frac{\beta}{8\sqrt{2}}\ |011100111\rangle + \frac{\beta}{8\sqrt{2}}\ |100101000\rangle + \frac{\beta}{8\sqrt{2}}\ |100101001\rangle + \frac{\beta}{8\sqrt{2}}\ |110101010\rangle + \frac{\beta}{8\sqrt{2}}\ |110101011\rangle - \frac{\beta}{8\sqrt{2}}$
$|100101100\rangle - \frac{\beta}{8\sqrt{2}}\ |100101101\rangle - \frac{\beta}{8\sqrt{2}}\ |110101110\rangle - \frac{\beta}{8\sqrt{2}}\ |110101111\rangle - \frac{\beta}{8\sqrt{2}}\ |011110000\rangle - \frac{\beta}{8\sqrt{2}}\ |011110001\rangle + \frac{\beta}{8\sqrt{2}}$
$|001110010\rangle + \frac{\beta}{8\sqrt{2}}\ |001110011\rangle + \frac{\beta}{8\sqrt{2}}\ |011110100\rangle + \frac{\beta}{8\sqrt{2}}\ |011110101\rangle - \frac{\beta}{8\sqrt{2}}\ |001110110\rangle - \frac{\beta}{8\sqrt{2}}\ |001110111\rangle - \frac{\beta}{8\sqrt{2}}$
$|110111000\rangle - \frac{\beta}{8\sqrt{2}}\ |110111001\rangle - \frac{\beta}{8\sqrt{2}}\ |100111010\rangle - \frac{\beta}{8\sqrt{2}}\ |100111011\rangle + \frac{\beta}{8\sqrt{2}}\ |110111100\rangle + \frac{\beta}{8\sqrt{2}}\ |110111101\rangle + \frac{\beta}{8\sqrt{2}}$
$|100111110\rangle + \frac{\beta}{8\sqrt{2}}\ |100111111\rangle - \frac{\beta}{8\sqrt{2}}\ |111000000\rangle - \frac{\beta}{8\sqrt{2}}\ |111000001\rangle + \frac{\beta}{8\sqrt{2}}\ |101000010\rangle + \frac{\beta}{8\sqrt{2}}\ |101000011\rangle + \frac{\beta}{8\sqrt{2}}$
$|111000100\rangle + \frac{\beta}{8\sqrt{2}}\ |111000101\rangle - \frac{\beta}{8\sqrt{2}}\ |101000110\rangle - \frac{\beta}{8\sqrt{2}}\ |101000111\rangle + \frac{\beta}{8\sqrt{2}}\ |010001000\rangle + \frac{\beta}{8\sqrt{2}}\ |010001001\rangle + \frac{\beta}{8\sqrt{2}}$
$|000001010\rangle + \frac{\beta}{8\sqrt{2}}\ |000001011\rangle - \frac{\beta}{8\sqrt{2}}\ |010001100\rangle - \frac{\beta}{8\sqrt{2}}\ |010001101\rangle - \frac{\beta}{8\sqrt{2}}\ |000001110\rangle - \frac{\beta}{8\sqrt{2}}\ |000001111\rangle + \frac{\beta}{8\sqrt{2}}$
$|101010000\rangle + \frac{\beta}{8\sqrt{2}}\ |101010001\rangle - \frac{\beta}{8\sqrt{2}}\ |111010010\rangle - \frac{\beta}{8\sqrt{2}}\ |111010011\rangle - \frac{\beta}{8\sqrt{2}}\ |101010100\rangle - \frac{\beta}{8\sqrt{2}}\ |101010101\rangle + \frac{\beta}{8\sqrt{2}}$
$|111010110\rangle + \frac{\beta}{8\sqrt{2}}\ |111010111\rangle + \frac{\beta}{8\sqrt{2}}\ |000011000\rangle + \frac{\beta}{8\sqrt{2}}\ |000011001\rangle + \frac{\beta}{8\sqrt{2}}\ |010011010\rangle + \frac{\beta}{8\sqrt{2}}\ |010011011\rangle - \frac{\beta}{8\sqrt{2}}$
$|000011100\rangle - \frac{\beta}{8\sqrt{2}}\ |000011101\rangle - \frac{\beta}{8\sqrt{2}}\ |010011110\rangle - \frac{\beta}{8\sqrt{2}}\ |010011111\rangle.$

- Porte Z(4) :

$|\psi_3\rangle = \frac{\alpha}{8\sqrt{2}}\ |100000000\rangle + \frac{\alpha}{8\sqrt{2}}\ |100000001\rangle + \frac{\alpha}{8\sqrt{2}}\ |110000010\rangle + \frac{\alpha}{8\sqrt{2}}\ |110000011\rangle - \frac{\alpha}{8\sqrt{2}}\ |100000100\rangle - \frac{\alpha}{8\sqrt{2}}$
$|100000101\rangle - \frac{\alpha}{8\sqrt{2}}\ |110000110\rangle - \frac{\alpha}{8\sqrt{2}}\ |110000111\rangle + \frac{\alpha}{8\sqrt{2}}\ |001001000\rangle + \frac{\alpha}{8\sqrt{2}}\ |001001001\rangle - \frac{\alpha}{8\sqrt{2}}\ |011001010\rangle - \frac{\alpha}{8\sqrt{2}}$
$|011001011\rangle - \frac{\alpha}{8\sqrt{2}}\ |001001100\rangle - \frac{\alpha}{8\sqrt{2}}\ |001001101\rangle + \frac{\alpha}{8\sqrt{2}}\ |011001110\rangle + \frac{\alpha}{8\sqrt{2}}\ |011001111\rangle + \frac{\alpha}{8\sqrt{2}}\ |110010000\rangle + \frac{\alpha}{8\sqrt{2}}$
$|110010001\rangle + \frac{\alpha}{8\sqrt{2}}\ |100010010\rangle + \frac{\alpha}{8\sqrt{2}}\ |100010011\rangle - \frac{\alpha}{8\sqrt{2}}\ |110010100\rangle - \frac{\alpha}{8\sqrt{2}}\ |110010101\rangle - \frac{\alpha}{8\sqrt{2}}\ |100010110\rangle - \frac{\alpha}{8\sqrt{2}}$
$|100010111\rangle - \frac{\alpha}{8\sqrt{2}}\ |011011000\rangle - \frac{\alpha}{8\sqrt{2}}\ |011011001\rangle + \frac{\alpha}{8\sqrt{2}}\ |001011010\rangle + \frac{\alpha}{8\sqrt{2}}\ |001011011\rangle + \frac{\alpha}{8\sqrt{2}}\ |011011100\rangle + \frac{\alpha}{8\sqrt{2}}$
$|011011101\rangle - \frac{\alpha}{8\sqrt{2}}\ |001011110\rangle - \frac{\alpha}{8\sqrt{2}}\ |001011111\rangle + \frac{\alpha}{8\sqrt{2}}\ |010100000\rangle + \frac{\alpha}{8\sqrt{2}}\ |010100001\rangle - \frac{\alpha}{8\sqrt{2}}\ |000100010\rangle - \frac{\alpha}{8\sqrt{2}}$
$|000100011\rangle - \frac{\alpha}{8\sqrt{2}}\ |010100100\rangle - \frac{\alpha}{8\sqrt{2}}\ |010100101\rangle + \frac{\alpha}{8\sqrt{2}}\ |000100110\rangle + \frac{\alpha}{8\sqrt{2}}\ |000100111\rangle + \frac{\alpha}{8\sqrt{2}}\ |111101000\rangle + \frac{\alpha}{8\sqrt{2}}$

$|111101001\rangle+\frac{\alpha}{8\sqrt{2}}$ $|101101010\rangle+\frac{\alpha}{8\sqrt{2}}$ $|101101011\rangle-\frac{\alpha}{8\sqrt{2}}$ $|111101100\rangle-\frac{\alpha}{8\sqrt{2}}$ $|111101101\rangle-\frac{\alpha}{8\sqrt{2}}$ $|101101110\rangle-\frac{\alpha}{8\sqrt{2}}$
$|101101111\rangle-\frac{\alpha}{8\sqrt{2}}$ $|000110000\rangle-\frac{\alpha}{8\sqrt{2}}$ $|000110001\rangle+\frac{\alpha}{8\sqrt{2}}$ $|010110010\rangle+\frac{\alpha}{8\sqrt{2}}$ $|010110011\rangle+\frac{\alpha}{8\sqrt{2}}$ $|000110100\rangle+\frac{\alpha}{8\sqrt{2}}$
$|000110101\rangle-\frac{\alpha}{8\sqrt{2}}$ $|010110110\rangle-\frac{\alpha}{8\sqrt{2}}$ $|010110111\rangle+\frac{\alpha}{8\sqrt{2}}$ $|101111000\rangle+\frac{\alpha}{8\sqrt{2}}$ $|101111001\rangle+\frac{\alpha}{8\sqrt{2}}$ $|111111010\rangle+\frac{\alpha}{8\sqrt{2}}$
$|111111011\rangle-\frac{\alpha}{8\sqrt{2}}$ $|101111100\rangle-\frac{\alpha}{8\sqrt{2}}$ $|101111101\rangle-\frac{\alpha}{8\sqrt{2}}$ $|111111110\rangle-\frac{\alpha}{8\sqrt{2}}$ $|111111111\rangle+\frac{\alpha}{8\sqrt{2}}$ $|111100000\rangle+\frac{\alpha}{8\sqrt{2}}$
$|111100001\rangle+\frac{\alpha}{8\sqrt{2}}$ $|101100010\rangle+\frac{\alpha}{8\sqrt{2}}$ $|101100011\rangle-\frac{\alpha}{8\sqrt{2}}$ $|111100100\rangle-\frac{\alpha}{8\sqrt{2}}$ $|111100101\rangle-\frac{\alpha}{8\sqrt{2}}$ $|101100110\rangle-\frac{\alpha}{8\sqrt{2}}$
$|101100111\rangle+\frac{\alpha}{8\sqrt{2}}$ $|010101000\rangle+\frac{\alpha}{8\sqrt{2}}$ $|010101001\rangle-\frac{\alpha}{8\sqrt{2}}$ $|000101010\rangle-\frac{\alpha}{8\sqrt{2}}$ $|000101011\rangle-\frac{\alpha}{8\sqrt{2}}$ $|010101100\rangle-\frac{\alpha}{8\sqrt{2}}$
$|010101101\rangle+\frac{\alpha}{8\sqrt{2}}$ $|000101110\rangle+\frac{\alpha}{8\sqrt{2}}$ $|000101111\rangle+\frac{\alpha}{8\sqrt{2}}$ $|101110000\rangle+\frac{\alpha}{8\sqrt{2}}$ $|101110001\rangle+\frac{\alpha}{8\sqrt{2}}$ $|111110010\rangle+\frac{\alpha}{8\sqrt{2}}$
$|111110011\rangle-\frac{\alpha}{8\sqrt{2}}$ $|101110100\rangle-\frac{\alpha}{8\sqrt{2}}$ $|101110101\rangle-\frac{\alpha}{8\sqrt{2}}$ $|111110110\rangle-\frac{\alpha}{8\sqrt{2}}$ $|111110111\rangle-\frac{\alpha}{8\sqrt{2}}$ $|000111000\rangle-\frac{\alpha}{8\sqrt{2}}$
$|000111001\rangle+\frac{\alpha}{8\sqrt{2}}$ $|010111010\rangle+\frac{\alpha}{8\sqrt{2}}$ $|010111011\rangle+\frac{\alpha}{8\sqrt{2}}$ $|000111100\rangle+\frac{\alpha}{8\sqrt{2}}$ $|000111101\rangle-\frac{\alpha}{8\sqrt{2}}$ $|010111110\rangle-\frac{\alpha}{8\sqrt{2}}$
$|010111111\rangle+\frac{\alpha}{8\sqrt{2}}$ $|001000000\rangle+\frac{\alpha}{8\sqrt{2}}$ $|001000001\rangle-\frac{\alpha}{8\sqrt{2}}$ $|011000010\rangle-\frac{\alpha}{8\sqrt{2}}$ $|011000011\rangle-\frac{\alpha}{8\sqrt{2}}$ $|001000100\rangle-\frac{\alpha}{8\sqrt{2}}$
$|001000101\rangle+\frac{\alpha}{8\sqrt{2}}$ $|011000110\rangle+\frac{\alpha}{8\sqrt{2}}$ $|011000111\rangle+\frac{\alpha}{8\sqrt{2}}$ $|100001000\rangle+\frac{\alpha}{8\sqrt{2}}$ $|100001001\rangle+\frac{\alpha}{8\sqrt{2}}$ $|110001010\rangle+\frac{\alpha}{8\sqrt{2}}$
$|110001011\rangle-\frac{\alpha}{8\sqrt{2}}$ $|100001100\rangle-\frac{\alpha}{8\sqrt{2}}$ $|100001101\rangle-\frac{\alpha}{8\sqrt{2}}$ $|110001110\rangle-\frac{\alpha}{8\sqrt{2}}$ $|110001111\rangle-\frac{\alpha}{8\sqrt{2}}$ $|011010000\rangle-\frac{\alpha}{8\sqrt{2}}$
$|011010001\rangle+\frac{\alpha}{8\sqrt{2}}$ $|001010010\rangle+\frac{\alpha}{8\sqrt{2}}$ $|001010011\rangle+\frac{\alpha}{8\sqrt{2}}$ $|011010100\rangle+\frac{\alpha}{8\sqrt{2}}$ $|011010101\rangle-\frac{\alpha}{8\sqrt{2}}$ $|001010110\rangle-\frac{\alpha}{8\sqrt{2}}$
$|001010111\rangle+\frac{\alpha}{8\sqrt{2}}$ $|110011000\rangle+\frac{\alpha}{8\sqrt{2}}$ $|110011001\rangle+\frac{\alpha}{8\sqrt{2}}$ $|100011010\rangle+\frac{\alpha}{8\sqrt{2}}$ $|100011011\rangle-\frac{\alpha}{8\sqrt{2}}$ $|110011100\rangle-\frac{\alpha}{8\sqrt{2}}$
$|110011101\rangle-\frac{\alpha}{8\sqrt{2}}$ $|100011110\rangle-\frac{\alpha}{8\sqrt{2}}$ $|100011111\rangle+\frac{\beta}{8\sqrt{2}}$ $|010000000\rangle+\frac{\beta}{8\sqrt{2}}$ $|010000001\rangle+\frac{\beta}{8\sqrt{2}}$ $|000000010\rangle+\frac{\beta}{8\sqrt{2}}$
$|000000011\rangle-\frac{\beta}{8\sqrt{2}}$ $|010000100\rangle-\frac{\beta}{8\sqrt{2}}$ $|010000101\rangle-\frac{\beta}{8\sqrt{2}}$ $|000000110\rangle-\frac{\beta}{8\sqrt{2}}$ $|000000111\rangle-\frac{\beta}{8\sqrt{2}}$ $|111001000\rangle-\frac{\beta}{8\sqrt{2}}$
$|111001001\rangle+\frac{\beta}{8\sqrt{2}}$ $|101001010\rangle+\frac{\beta}{8\sqrt{2}}$ $|101001011\rangle+\frac{\beta}{8\sqrt{2}}$ $|111001100\rangle+\frac{\beta}{8\sqrt{2}}$ $|111001101\rangle-\frac{\beta}{8\sqrt{2}}$ $|101001110\rangle-\frac{\beta}{8\sqrt{2}}$
$|101001111\rangle+\frac{\beta}{8\sqrt{2}}$ $|000010000\rangle+\frac{\beta}{8\sqrt{2}}$ $|000010001\rangle+\frac{\beta}{8\sqrt{2}}$ $|010010010\rangle+\frac{\beta}{8\sqrt{2}}$ $|010010011\rangle-\frac{\beta}{8\sqrt{2}}$ $|000010100\rangle-\frac{\beta}{8\sqrt{2}}$
$|000010101\rangle-\frac{\beta}{8\sqrt{2}}$ $|010010110\rangle-\frac{\beta}{8\sqrt{2}}$ $|010010111\rangle+\frac{\beta}{8\sqrt{2}}$ $|101011000\rangle+\frac{\beta}{8\sqrt{2}}$ $|101011001\rangle-\frac{\beta}{8\sqrt{2}}$ $|111011010\rangle-\frac{\beta}{8\sqrt{2}}$
$|111011011\rangle-\frac{\beta}{8\sqrt{2}}$ $|101011100\rangle-\frac{\beta}{8\sqrt{2}}$ $|101011101\rangle+\frac{\beta}{8\sqrt{2}}$ $|111011110\rangle+\frac{\beta}{8\sqrt{2}}$ $|111011111\rangle+\frac{\beta}{8\sqrt{2}}$ $|100100000\rangle+\frac{\beta}{8\sqrt{2}}$
$|100100001\rangle-\frac{\beta}{8\sqrt{2}}$ $|110100010\rangle-\frac{\beta}{8\sqrt{2}}$ $|110100011\rangle-\frac{\beta}{8\sqrt{2}}$ $|100100100\rangle-\frac{\beta}{8\sqrt{2}}$ $|100100101\rangle+\frac{\beta}{8\sqrt{2}}$ $|110100110\rangle+\frac{\beta}{8\sqrt{2}}$
$|110100111\rangle-\frac{\beta}{8\sqrt{2}}$ $|001101000\rangle-\frac{\beta}{8\sqrt{2}}$ $|001101001\rangle-\frac{\beta}{8\sqrt{2}}$ $|011101010\rangle-\frac{\beta}{8\sqrt{2}}$ $|011101011\rangle+\frac{\beta}{8\sqrt{2}}$ $|001101100\rangle+\frac{\beta}{8\sqrt{2}}$
$|001101101\rangle+\frac{\beta}{8\sqrt{2}}$ $|011101110\rangle+\frac{\beta}{8\sqrt{2}}$ $|011101111\rangle-\frac{\beta}{8\sqrt{2}}$ $|110110000\rangle-\frac{\beta}{8\sqrt{2}}$ $|110110001\rangle+\frac{\beta}{8\sqrt{2}}$ $|100110010\rangle+\frac{\beta}{8\sqrt{2}}$
$|100110011\rangle+\frac{\beta}{8\sqrt{2}}$ $|110110100\rangle+\frac{\beta}{8\sqrt{2}}$ $|110110101\rangle-\frac{\beta}{8\sqrt{2}}$ $|100110110\rangle-\frac{\beta}{8\sqrt{2}}$ $|100110111\rangle-\frac{\beta}{8\sqrt{2}}$ $|011111000\rangle-\frac{\beta}{8\sqrt{2}}$
$|011111001\rangle-\frac{\beta}{8\sqrt{2}}$ $|001111010\rangle-\frac{\beta}{8\sqrt{2}}$ $|001111011\rangle+\frac{\beta}{8\sqrt{2}}$ $|011111100\rangle+\frac{\beta}{8\sqrt{2}}$ $|011111101\rangle+\frac{\beta}{8\sqrt{2}}$ $|001111110\rangle+\frac{\beta}{8\sqrt{2}}$
$|001111111\rangle-\frac{\beta}{8\sqrt{2}}$ $|001100000\rangle-\frac{\beta}{8\sqrt{2}}$ $|001100001\rangle-\frac{\beta}{8\sqrt{2}}$ $|011100010\rangle-\frac{\beta}{8\sqrt{2}}$ $|011100011\rangle+\frac{\beta}{8\sqrt{2}}$ $|001100100\rangle+\frac{\beta}{8\sqrt{2}}$
$|001100101\rangle+\frac{\beta}{8\sqrt{2}}$ $|011100110\rangle+\frac{\beta}{8\sqrt{2}}$ $|011100111\rangle+\frac{\beta}{8\sqrt{2}}$ $|100101000\rangle+\frac{\beta}{8\sqrt{2}}$ $|100101001\rangle-\frac{\beta}{8\sqrt{2}}$ $|110101010\rangle-\frac{\beta}{8\sqrt{2}}$
$|110101011\rangle-\frac{\beta}{8\sqrt{2}}$ $|100101100\rangle-\frac{\beta}{8\sqrt{2}}$ $|100101101\rangle+\frac{\beta}{8\sqrt{2}}$ $|110101110\rangle+\frac{\beta}{8\sqrt{2}}$ $|110101111\rangle-\frac{\beta}{8\sqrt{2}}$ $|011110000\rangle-\frac{\beta}{8\sqrt{2}}$
$|011110001\rangle-\frac{\beta}{8\sqrt{2}}$ $|001110010\rangle-\frac{\beta}{8\sqrt{2}}$ $|001110011\rangle+\frac{\beta}{8\sqrt{2}}$ $|011110100\rangle+\frac{\beta}{8\sqrt{2}}$ $|011110101\rangle+\frac{\beta}{8\sqrt{2}}$ $|001110110\rangle+\frac{\beta}{8\sqrt{2}}$
$|001110111\rangle-\frac{\beta}{8\sqrt{2}}$ $|110111000\rangle-\frac{\beta}{8\sqrt{2}}$ $|110111001\rangle+\frac{\beta}{8\sqrt{2}}$ $|100111010\rangle+\frac{\beta}{8\sqrt{2}}$ $|100111011\rangle+\frac{\beta}{8\sqrt{2}}$ $|110111100\rangle+\frac{\beta}{8\sqrt{2}}$
$|110111101\rangle-\frac{\beta}{8\sqrt{2}}$ $|100111110\rangle-\frac{\beta}{8\sqrt{2}}$ $|100111111\rangle-\frac{\beta}{8\sqrt{2}}$ $|111000000\rangle-\frac{\beta}{8\sqrt{2}}$ $|111000001\rangle+\frac{\beta}{8\sqrt{2}}$ $|101000010\rangle+\frac{\beta}{8\sqrt{2}}$
$|101000011\rangle+\frac{\beta}{8\sqrt{2}}$ $|111000100\rangle+\frac{\beta}{8\sqrt{2}}$ $|111000101\rangle-\frac{\beta}{8\sqrt{2}}$ $|101000110\rangle-\frac{\beta}{8\sqrt{2}}$ $|101000111\rangle+\frac{\beta}{8\sqrt{2}}$ $|010001000\rangle+\frac{\beta}{8\sqrt{2}}$
$|010001001\rangle+\frac{\beta}{8\sqrt{2}}$ $|000001010\rangle+\frac{\beta}{8\sqrt{2}}$ $|000001011\rangle-\frac{\beta}{8\sqrt{2}}$ $|010001100\rangle-\frac{\beta}{8\sqrt{2}}$ $|010001101\rangle-\frac{\beta}{8\sqrt{2}}$ $|000001110\rangle-\frac{\beta}{8\sqrt{2}}$
$|000001111\rangle+\frac{\beta}{8\sqrt{2}}$ $|101010000\rangle+\frac{\beta}{8\sqrt{2}}$ $|101010001\rangle-\frac{\beta}{8\sqrt{2}}$ $|111010010\rangle-\frac{\beta}{8\sqrt{2}}$ $|111010011\rangle-\frac{\beta}{8\sqrt{2}}$ $|101010100\rangle-\frac{\beta}{8\sqrt{2}}$
$|101010101\rangle+\frac{\beta}{8\sqrt{2}}$ $|111010110\rangle+\frac{\beta}{8\sqrt{2}}$ $|111010111\rangle+\frac{\beta}{8\sqrt{2}}$ $|000011000\rangle+\frac{\beta}{8\sqrt{2}}$ $|000011001\rangle+\frac{\beta}{8\sqrt{2}}$ $|010011010\rangle+\frac{\beta}{8\sqrt{2}}$
$|010011011\rangle-\frac{\beta}{8\sqrt{2}}$ $|000011100\rangle-\frac{\beta}{8\sqrt{2}}$ $|000011101\rangle-\frac{\beta}{8\sqrt{2}}$ $|010011110\rangle-\frac{\beta}{8\sqrt{2}}$ $|010011111\rangle$.

- Porte X(5) :

$$
\begin{aligned}
|\psi_3\rangle = {} & \frac{\alpha}{8\sqrt{2}}|100000000\rangle + \frac{\alpha}{8\sqrt{2}}|100000001\rangle + \frac{\alpha}{8\sqrt{2}}|110010010\rangle + \frac{\alpha}{8\sqrt{2}}|110010011\rangle - \frac{\alpha}{8\sqrt{2}}|100000100\rangle - \frac{\alpha}{8\sqrt{2}} \\
& |100000101\rangle - \frac{\alpha}{8\sqrt{2}}|110010110\rangle - \frac{\alpha}{8\sqrt{2}}|110010111\rangle + \frac{\alpha}{8\sqrt{2}}|001001000\rangle + \frac{\alpha}{8\sqrt{2}}|001001001\rangle - \frac{\alpha}{8\sqrt{2}}|011011010\rangle - \frac{\alpha}{8\sqrt{2}} \\
& |011011011\rangle - \frac{\alpha}{8\sqrt{2}}|001001100\rangle - \frac{\alpha}{8\sqrt{2}}|001001101\rangle + \frac{\alpha}{8\sqrt{2}}|011011110\rangle + \frac{\alpha}{8\sqrt{2}}|011011111\rangle + \frac{\alpha}{8\sqrt{2}}|110010000\rangle + \frac{\alpha}{8\sqrt{2}} \\
& |110010001\rangle + \frac{\alpha}{8\sqrt{2}}|100000010\rangle + \frac{\alpha}{8\sqrt{2}}|100000011\rangle - \frac{\alpha}{8\sqrt{2}}|110010100\rangle - \frac{\alpha}{8\sqrt{2}}|110010101\rangle - \frac{\alpha}{8\sqrt{2}}|100000110\rangle - \frac{\alpha}{8\sqrt{2}} \\
& |100000111\rangle - \frac{\alpha}{8\sqrt{2}}|011011000\rangle - \frac{\alpha}{8\sqrt{2}}|011011001\rangle + \frac{\alpha}{8\sqrt{2}}|001001010\rangle + \frac{\alpha}{8\sqrt{2}}|001001011\rangle + \frac{\alpha}{8\sqrt{2}}|011011100\rangle + \frac{\alpha}{8\sqrt{2}} \\
& |011011101\rangle - \frac{\alpha}{8\sqrt{2}}|001001110\rangle - \frac{\alpha}{8\sqrt{2}}|001001111\rangle + \frac{\alpha}{8\sqrt{2}}|010100000\rangle + \frac{\alpha}{8\sqrt{2}}|010100001\rangle - \frac{\alpha}{8\sqrt{2}}|000110010\rangle - \frac{\alpha}{8\sqrt{2}} \\
& |000110011\rangle - \frac{\alpha}{8\sqrt{2}}|010100100\rangle - \frac{\alpha}{8\sqrt{2}}|010100101\rangle + \frac{\alpha}{8\sqrt{2}}|000110110\rangle + \frac{\alpha}{8\sqrt{2}}|000110111\rangle + \frac{\alpha}{8\sqrt{2}}|111101000\rangle + \frac{\alpha}{8\sqrt{2}} \\
& |111101001\rangle + \frac{\alpha}{8\sqrt{2}}|101111010\rangle + \frac{\alpha}{8\sqrt{2}}|101111011\rangle - \frac{\alpha}{8\sqrt{2}}|111101100\rangle - \frac{\alpha}{8\sqrt{2}}|111101101\rangle - \frac{\alpha}{8\sqrt{2}}|101111110\rangle - \frac{\alpha}{8\sqrt{2}} \\
& |101111111\rangle - \frac{\alpha}{8\sqrt{2}}|000110000\rangle - \frac{\alpha}{8\sqrt{2}}|000110001\rangle + \frac{\alpha}{8\sqrt{2}}|010100010\rangle + \frac{\alpha}{8\sqrt{2}}|010100011\rangle + \frac{\alpha}{8\sqrt{2}}|000110100\rangle + \frac{\alpha}{8\sqrt{2}} \\
& |000110101\rangle - \frac{\alpha}{8\sqrt{2}}|010100110\rangle - \frac{\alpha}{8\sqrt{2}}|010100111\rangle + \frac{\alpha}{8\sqrt{2}}|101111000\rangle + \frac{\alpha}{8\sqrt{2}}|101111001\rangle + \frac{\alpha}{8\sqrt{2}}|111101010\rangle + \frac{\alpha}{8\sqrt{2}} \\
& |111101011\rangle - \frac{\alpha}{8\sqrt{2}}|101111100\rangle - \frac{\alpha}{8\sqrt{2}}|101111101\rangle - \frac{\alpha}{8\sqrt{2}}|111101110\rangle - \frac{\alpha}{8\sqrt{2}}|111101111\rangle + \frac{\alpha}{8\sqrt{2}}|111100000\rangle + \frac{\alpha}{8\sqrt{2}} \\
& |111100001\rangle + \frac{\alpha}{8\sqrt{2}}|101110010\rangle + \frac{\alpha}{8\sqrt{2}}|101110011\rangle - \frac{\alpha}{8\sqrt{2}}|111100100\rangle - \frac{\alpha}{8\sqrt{2}}|111100101\rangle - \frac{\alpha}{8\sqrt{2}}|101110110\rangle - \frac{\alpha}{8\sqrt{2}} \\
& |101110111\rangle + \frac{\alpha}{8\sqrt{2}}|010101000\rangle + \frac{\alpha}{8\sqrt{2}}|010101001\rangle - \frac{\alpha}{8\sqrt{2}}|000111010\rangle - \frac{\alpha}{8\sqrt{2}}|000111011\rangle - \frac{\alpha}{8\sqrt{2}}|010101100\rangle - \frac{\alpha}{8\sqrt{2}} \\
& |010101101\rangle + \frac{\alpha}{8\sqrt{2}}|000111110\rangle + \frac{\alpha}{8\sqrt{2}}|000111111\rangle + \frac{\alpha}{8\sqrt{2}}|101110000\rangle + \frac{\alpha}{8\sqrt{2}}|101110001\rangle + \frac{\alpha}{8\sqrt{2}}|111100010\rangle + \frac{\alpha}{8\sqrt{2}} \\
& |111100011\rangle - \frac{\alpha}{8\sqrt{2}}|101110100\rangle - \frac{\alpha}{8\sqrt{2}}|101110101\rangle - \frac{\alpha}{8\sqrt{2}}|111100110\rangle - \frac{\alpha}{8\sqrt{2}}|111100111\rangle - \frac{\alpha}{8\sqrt{2}}|000111000\rangle - \frac{\alpha}{8\sqrt{2}} \\
& |000111001\rangle + \frac{\alpha}{8\sqrt{2}}|010101010\rangle + \frac{\alpha}{8\sqrt{2}}|010101011\rangle + \frac{\alpha}{8\sqrt{2}}|000111100\rangle + \frac{\alpha}{8\sqrt{2}}|000111101\rangle - \frac{\alpha}{8\sqrt{2}}|010101110\rangle - \frac{\alpha}{8\sqrt{2}} \\
& |010101111\rangle + \frac{\alpha}{8\sqrt{2}}|001000000\rangle + \frac{\alpha}{8\sqrt{2}}|001000001\rangle - \frac{\alpha}{8\sqrt{2}}|011010010\rangle - \frac{\alpha}{8\sqrt{2}}|011010011\rangle - \frac{\alpha}{8\sqrt{2}}|001000100\rangle - \frac{\alpha}{8\sqrt{2}} \\
& |001000101\rangle + \frac{\alpha}{8\sqrt{2}}|011010110\rangle + \frac{\alpha}{8\sqrt{2}}|011010111\rangle + \frac{\alpha}{8\sqrt{2}}|100001000\rangle + \frac{\alpha}{8\sqrt{2}}|100001001\rangle + \frac{\alpha}{8\sqrt{2}}|110011010\rangle + \frac{\alpha}{8\sqrt{2}} \\
& |110011011\rangle - \frac{\alpha}{8\sqrt{2}}|100001100\rangle - \frac{\alpha}{8\sqrt{2}}|100001101\rangle - \frac{\alpha}{8\sqrt{2}}|110011110\rangle - \frac{\alpha}{8\sqrt{2}}|110011111\rangle - \frac{\alpha}{8\sqrt{2}}|011010000\rangle - \frac{\alpha}{8\sqrt{2}} \\
& |011010001\rangle + \frac{\alpha}{8\sqrt{2}}|001000010\rangle + \frac{\alpha}{8\sqrt{2}}|001000011\rangle + \frac{\alpha}{8\sqrt{2}}|011010100\rangle + \frac{\alpha}{8\sqrt{2}}|011010101\rangle - \frac{\alpha}{8\sqrt{2}}|001000110\rangle - \frac{\alpha}{8\sqrt{2}} \\
& |001000111\rangle + \frac{\alpha}{8\sqrt{2}}|110011000\rangle + \frac{\alpha}{8\sqrt{2}}|110011001\rangle + \frac{\alpha}{8\sqrt{2}}|100001010\rangle + \frac{\alpha}{8\sqrt{2}}|100001011\rangle - \frac{\alpha}{8\sqrt{2}}|110011100\rangle - \frac{\alpha}{8\sqrt{2}} \\
& |110011101\rangle - \frac{\alpha}{8\sqrt{2}}|100001110\rangle - \frac{\alpha}{8\sqrt{2}}|100001111\rangle + \frac{\beta}{8\sqrt{2}}|010000000\rangle + \frac{\beta}{8\sqrt{2}}|010000001\rangle + \frac{\beta}{8\sqrt{2}}|000010010\rangle + \frac{\beta}{8\sqrt{2}} \\
& |000010011\rangle - \frac{\beta}{8\sqrt{2}}|010000100\rangle - \frac{\beta}{8\sqrt{2}}|010000101\rangle - \frac{\beta}{8\sqrt{2}}|000010110\rangle - \frac{\beta}{8\sqrt{2}}|000010111\rangle - \frac{\beta}{8\sqrt{2}}|111001000\rangle - \frac{\beta}{8\sqrt{2}} \\
& |111001001\rangle + \frac{\beta}{8\sqrt{2}}|101011010\rangle + \frac{\beta}{8\sqrt{2}}|101011011\rangle + \frac{\beta}{8\sqrt{2}}|111001100\rangle + \frac{\beta}{8\sqrt{2}}|111001101\rangle - \frac{\beta}{8\sqrt{2}}|101011110\rangle - \frac{\beta}{8\sqrt{2}} \\
& |101011111\rangle + \frac{\beta}{8\sqrt{2}}|000010000\rangle + \frac{\beta}{8\sqrt{2}}|000010001\rangle + \frac{\beta}{8\sqrt{2}}|010000010\rangle + \frac{\beta}{8\sqrt{2}}|010000011\rangle - \frac{\beta}{8\sqrt{2}}|000010100\rangle - \frac{\beta}{8\sqrt{2}} \\
& |000010101\rangle - \frac{\beta}{8\sqrt{2}}|010000110\rangle - \frac{\beta}{8\sqrt{2}}|010000111\rangle + \frac{\beta}{8\sqrt{2}}|101011000\rangle + \frac{\beta}{8\sqrt{2}}|101011001\rangle - \frac{\beta}{8\sqrt{2}}|111001010\rangle - \frac{\beta}{8\sqrt{2}} \\
& |111001011\rangle - \frac{\beta}{8\sqrt{2}}|101011100\rangle - \frac{\beta}{8\sqrt{2}}|101011101\rangle + \frac{\beta}{8\sqrt{2}}|111001110\rangle + \frac{\beta}{8\sqrt{2}}|111001111\rangle + \frac{\beta}{8\sqrt{2}}|100100000\rangle + \frac{\beta}{8\sqrt{2}} \\
& |100100001\rangle - \frac{\beta}{8\sqrt{2}}|110110010\rangle - \frac{\beta}{8\sqrt{2}}|110110011\rangle - \frac{\beta}{8\sqrt{2}}|100100100\rangle - \frac{\beta}{8\sqrt{2}}|100100101\rangle + \frac{\beta}{8\sqrt{2}}|110110110\rangle + \frac{\beta}{8\sqrt{2}} \\
& |110110111\rangle - \frac{\beta}{8\sqrt{2}}|001101000\rangle - \frac{\beta}{8\sqrt{2}}|001101001\rangle - \frac{\beta}{8\sqrt{2}}|011111010\rangle - \frac{\beta}{8\sqrt{2}}|011111011\rangle + \frac{\beta}{8\sqrt{2}}|001101100\rangle + \frac{\beta}{8\sqrt{2}} \\
& |001101101\rangle + \frac{\beta}{8\sqrt{2}}|011111110\rangle + \frac{\beta}{8\sqrt{2}}|011111111\rangle - \frac{\beta}{8\sqrt{2}}|110110000\rangle - \frac{\beta}{8\sqrt{2}}|110110001\rangle + \frac{\beta}{8\sqrt{2}}|100100010\rangle + \frac{\beta}{8\sqrt{2}} \\
& |100100011\rangle + \frac{\beta}{8\sqrt{2}}|110110100\rangle + \frac{\beta}{8\sqrt{2}}|110110101\rangle - \frac{\beta}{8\sqrt{2}}|100100110\rangle - \frac{\beta}{8\sqrt{2}}|100100111\rangle - \frac{\beta}{8\sqrt{2}}|011111000\rangle - \frac{\beta}{8\sqrt{2}} \\
& |011111001\rangle - \frac{\beta}{8\sqrt{2}}|001101010\rangle - \frac{\beta}{8\sqrt{2}}|001101011\rangle + \frac{\beta}{8\sqrt{2}}|011111100\rangle + \frac{\beta}{8\sqrt{2}}|011111101\rangle + \frac{\beta}{8\sqrt{2}}|001101110\rangle + \frac{\beta}{8\sqrt{2}} \\
& |001101111\rangle - \frac{\beta}{8\sqrt{2}}|001100000\rangle - \frac{\beta}{8\sqrt{2}}|001100001\rangle - \frac{\beta}{8\sqrt{2}}|011110010\rangle - \frac{\beta}{8\sqrt{2}}|011110011\rangle + \frac{\beta}{8\sqrt{2}}|001100100\rangle + \frac{\beta}{8\sqrt{2}} \\
& |001100101\rangle + \frac{\beta}{8\sqrt{2}}|011110110\rangle + \frac{\beta}{8\sqrt{2}}|011110111\rangle + \frac{\beta}{8\sqrt{2}}|100101000\rangle + \frac{\beta}{8\sqrt{2}}|100101001\rangle - \frac{\beta}{8\sqrt{2}}|110111010\rangle - \frac{\beta}{8\sqrt{2}} \\
& |110111011\rangle - \frac{\beta}{8\sqrt{2}}|100101100\rangle - \frac{\beta}{8\sqrt{2}}|100101101\rangle + \frac{\beta}{8\sqrt{2}}|110111110\rangle + \frac{\beta}{8\sqrt{2}}|110111111\rangle - \frac{\beta}{8\sqrt{2}}|011110000\rangle - \frac{\beta}{8\sqrt{2}} \\
& |011110001\rangle - \frac{\beta}{8\sqrt{2}}|001100010\rangle - \frac{\beta}{8\sqrt{2}}|001100011\rangle + \frac{\beta}{8\sqrt{2}}|011110100\rangle + \frac{\beta}{8\sqrt{2}}|011110101\rangle + \frac{\beta}{8\sqrt{2}}|001100110\rangle + \frac{\beta}{8\sqrt{2}} \\
& |001100111\rangle - \frac{\beta}{8\sqrt{2}}|110111000\rangle - \frac{\beta}{8\sqrt{2}}|110111001\rangle + \frac{\beta}{8\sqrt{2}}|100101010\rangle + \frac{\beta}{8\sqrt{2}}|100101011\rangle + \frac{\beta}{8\sqrt{2}}|110111100\rangle + \frac{\beta}{8\sqrt{2}} \\
& |110111101\rangle - \frac{\beta}{8\sqrt{2}}|100101110\rangle - \frac{\beta}{8\sqrt{2}}|100101111\rangle - \frac{\beta}{8\sqrt{2}}|111000000\rangle - \frac{\beta}{8\sqrt{2}}|111000001\rangle + \frac{\beta}{8\sqrt{2}}|101010010\rangle + \frac{\beta}{8\sqrt{2}} \\
& |101010011\rangle + \frac{\beta}{8\sqrt{2}}|111000100\rangle + \frac{\beta}{8\sqrt{2}}|111000101\rangle - \frac{\beta}{8\sqrt{2}}|101010110\rangle - \frac{\beta}{8\sqrt{2}}|101010111\rangle + \frac{\beta}{8\sqrt{2}}|010001000\rangle + \frac{\beta}{8\sqrt{2}} \\
& |010001001\rangle + \frac{\beta}{8\sqrt{2}}|000011010\rangle + \frac{\beta}{8\sqrt{2}}|000011011\rangle - \frac{\beta}{8\sqrt{2}}|010001100\rangle - \frac{\beta}{8\sqrt{2}}|010001101\rangle - \frac{\beta}{8\sqrt{2}}|000011110\rangle - \frac{\beta}{8\sqrt{2}}
\end{aligned}
$$

$|000011111\rangle+\frac{\beta}{8\sqrt{2}}|101010000\rangle+\frac{\beta}{8\sqrt{2}}|101010001\rangle-\frac{\beta}{8\sqrt{2}}|111000010\rangle-\frac{\beta}{8\sqrt{2}}|111000011\rangle-\frac{\beta}{8\sqrt{2}}|101010100\rangle-\frac{\beta}{8\sqrt{2}}$
$|101010101\rangle+\frac{\beta}{8\sqrt{2}}|111000110\rangle+\frac{\beta}{8\sqrt{2}}|111000111\rangle+\frac{\beta}{8\sqrt{2}}|000011000\rangle+\frac{\beta}{8\sqrt{2}}|000011001\rangle+\frac{\beta}{8\sqrt{2}}|010001010\rangle+\frac{\beta}{8\sqrt{2}}$
$|010001011\rangle-\frac{\beta}{8\sqrt{2}}|000011100\rangle-\frac{\beta}{8\sqrt{2}}|000011101\rangle-\frac{\beta}{8\sqrt{2}}|010001110\rangle-\frac{\beta}{8\sqrt{2}}|010001111\rangle.$

✓ M_3 :

- Porte Z(1) :

$|\psi_3\rangle=\frac{\alpha}{8\sqrt{2}}|100000000\rangle-\frac{\alpha}{8\sqrt{2}}|100000001\rangle+\frac{\alpha}{8\sqrt{2}}|110010010\rangle-\frac{\alpha}{8\sqrt{2}}|110010011\rangle-\frac{\alpha}{8\sqrt{2}}|100000100\rangle+\frac{\alpha}{8\sqrt{2}}$
$|100000101\rangle-\frac{\alpha}{8\sqrt{2}}|110010110\rangle+\frac{\alpha}{8\sqrt{2}}|110010111\rangle+\frac{\alpha}{8\sqrt{2}}|001001000\rangle+\frac{\alpha}{8\sqrt{2}}|001001001\rangle-\frac{\alpha}{8\sqrt{2}}|011011010\rangle-\frac{\alpha}{8\sqrt{2}}$
$|011011011\rangle-\frac{\alpha}{8\sqrt{2}}|001001100\rangle-\frac{\alpha}{8\sqrt{2}}|001001101\rangle+\frac{\alpha}{8\sqrt{2}}|011011110\rangle+\frac{\alpha}{8\sqrt{2}}|011011111\rangle+\frac{\alpha}{8\sqrt{2}}|110010000\rangle-\frac{\alpha}{8\sqrt{2}}$
$|110010001\rangle+\frac{\alpha}{8\sqrt{2}}|100000010\rangle-\frac{\alpha}{8\sqrt{2}}|100000011\rangle-\frac{\alpha}{8\sqrt{2}}|110010100\rangle+\frac{\alpha}{8\sqrt{2}}|110010101\rangle-\frac{\alpha}{8\sqrt{2}}|100000110\rangle+\frac{\alpha}{8\sqrt{2}}$
$|100000111\rangle-\frac{\alpha}{8\sqrt{2}}|011011000\rangle-\frac{\alpha}{8\sqrt{2}}|011011001\rangle+\frac{\alpha}{8\sqrt{2}}|001001010\rangle+\frac{\alpha}{8\sqrt{2}}|001001011\rangle+\frac{\alpha}{8\sqrt{2}}|011011100\rangle+\frac{\alpha}{8\sqrt{2}}$
$|011011101\rangle-\frac{\alpha}{8\sqrt{2}}|001001110\rangle-\frac{\alpha}{8\sqrt{2}}|001001111\rangle+\frac{\alpha}{8\sqrt{2}}|010100000\rangle+\frac{\alpha}{8\sqrt{2}}|010100001\rangle-\frac{\alpha}{8\sqrt{2}}|000110010\rangle-\frac{\alpha}{8\sqrt{2}}$
$|000110011\rangle-\frac{\alpha}{8\sqrt{2}}|010100100\rangle-\frac{\alpha}{8\sqrt{2}}|010100101\rangle+\frac{\alpha}{8\sqrt{2}}|000110110\rangle+\frac{\alpha}{8\sqrt{2}}|000110111\rangle+\frac{\alpha}{8\sqrt{2}}|111101000\rangle-\frac{\alpha}{8\sqrt{2}}$
$|111101001\rangle+\frac{\alpha}{8\sqrt{2}}|101111010\rangle-\frac{\alpha}{8\sqrt{2}}|101111011\rangle-\frac{\alpha}{8\sqrt{2}}|111101100\rangle+\frac{\alpha}{8\sqrt{2}}|111101101\rangle-\frac{\alpha}{8\sqrt{2}}|101111110\rangle+\frac{\alpha}{8\sqrt{2}}$
$|101111111\rangle-\frac{\alpha}{8\sqrt{2}}|000110000\rangle-\frac{\alpha}{8\sqrt{2}}|000110001\rangle+\frac{\alpha}{8\sqrt{2}}|010100010\rangle+\frac{\alpha}{8\sqrt{2}}|010100011\rangle+\frac{\alpha}{8\sqrt{2}}|000110100\rangle+\frac{\alpha}{8\sqrt{2}}$
$|000110101\rangle-\frac{\alpha}{8\sqrt{2}}|010100110\rangle-\frac{\alpha}{8\sqrt{2}}|010100111\rangle+\frac{\alpha}{8\sqrt{2}}|101111000\rangle-\frac{\alpha}{8\sqrt{2}}|101111001\rangle+\frac{\alpha}{8\sqrt{2}}|111101010\rangle-\frac{\alpha}{8\sqrt{2}}$
$|111101011\rangle-\frac{\alpha}{8\sqrt{2}}|101111100\rangle+\frac{\alpha}{8\sqrt{2}}|101111101\rangle-\frac{\alpha}{8\sqrt{2}}|111101110\rangle+\frac{\alpha}{8\sqrt{2}}|111101111\rangle+\frac{\alpha}{8\sqrt{2}}|111100000\rangle-\frac{\alpha}{8\sqrt{2}}$
$|111100001\rangle+\frac{\alpha}{8\sqrt{2}}|101110010\rangle-\frac{\alpha}{8\sqrt{2}}|101110011\rangle-\frac{\alpha}{8\sqrt{2}}|111100100\rangle+\frac{\alpha}{8\sqrt{2}}|111100101\rangle-\frac{\alpha}{8\sqrt{2}}|101110110\rangle+\frac{\alpha}{8\sqrt{2}}$
$|101110111\rangle+\frac{\alpha}{8\sqrt{2}}|010101000\rangle+\frac{\alpha}{8\sqrt{2}}|010101001\rangle-\frac{\alpha}{8\sqrt{2}}|000111010\rangle-\frac{\alpha}{8\sqrt{2}}|000111011\rangle-\frac{\alpha}{8\sqrt{2}}|010101100\rangle-\frac{\alpha}{8\sqrt{2}}$
$|010101101\rangle+\frac{\alpha}{8\sqrt{2}}|000111110\rangle+\frac{\alpha}{8\sqrt{2}}|000111111\rangle+\frac{\alpha}{8\sqrt{2}}|101110000\rangle-\frac{\alpha}{8\sqrt{2}}|101110001\rangle+\frac{\alpha}{8\sqrt{2}}|111100010\rangle-\frac{\alpha}{8\sqrt{2}}$
$|111100011\rangle-\frac{\alpha}{8\sqrt{2}}|101110100\rangle+\frac{\alpha}{8\sqrt{2}}|101110101\rangle-\frac{\alpha}{8\sqrt{2}}|111100110\rangle+\frac{\alpha}{8\sqrt{2}}|111100111\rangle-\frac{\alpha}{8\sqrt{2}}|000111000\rangle-\frac{\alpha}{8\sqrt{2}}$
$|000111001\rangle+\frac{\alpha}{8\sqrt{2}}|010101010\rangle+\frac{\alpha}{8\sqrt{2}}|010101011\rangle+\frac{\alpha}{8\sqrt{2}}|000111100\rangle+\frac{\alpha}{8\sqrt{2}}|000111101\rangle-\frac{\alpha}{8\sqrt{2}}|010101110\rangle-\frac{\alpha}{8\sqrt{2}}$
$|010101111\rangle+\frac{\alpha}{8\sqrt{2}}|001000000\rangle+\frac{\alpha}{8\sqrt{2}}|001000001\rangle-\frac{\alpha}{8\sqrt{2}}|011010010\rangle-\frac{\alpha}{8\sqrt{2}}|011010011\rangle-\frac{\alpha}{8\sqrt{2}}|001000100\rangle-\frac{\alpha}{8\sqrt{2}}$
$|001000101\rangle+\frac{\alpha}{8\sqrt{2}}|011010110\rangle+\frac{\alpha}{8\sqrt{2}}|011010111\rangle+\frac{\alpha}{8\sqrt{2}}|100001000\rangle-\frac{\alpha}{8\sqrt{2}}|100001001\rangle+\frac{\alpha}{8\sqrt{2}}|110011010\rangle-\frac{\alpha}{8\sqrt{2}}$
$|110011011\rangle-\frac{\alpha}{8\sqrt{2}}|100001100\rangle+\frac{\alpha}{8\sqrt{2}}|100001101\rangle-\frac{\alpha}{8\sqrt{2}}|110011110\rangle+\frac{\alpha}{8\sqrt{2}}|110011111\rangle-\frac{\alpha}{8\sqrt{2}}|011010000\rangle-\frac{\alpha}{8\sqrt{2}}$
$|011010001\rangle+\frac{\alpha}{8\sqrt{2}}|001000010\rangle+\frac{\alpha}{8\sqrt{2}}|001000011\rangle+\frac{\alpha}{8\sqrt{2}}|011010100\rangle+\frac{\alpha}{8\sqrt{2}}|011010101\rangle-\frac{\alpha}{8\sqrt{2}}|001000110\rangle-\frac{\alpha}{8\sqrt{2}}$
$|001000111\rangle+\frac{\alpha}{8\sqrt{2}}|110011000\rangle-\frac{\alpha}{8\sqrt{2}}|110011001\rangle+\frac{\alpha}{8\sqrt{2}}|100001010\rangle-\frac{\alpha}{8\sqrt{2}}|100001011\rangle-\frac{\alpha}{8\sqrt{2}}|110011100\rangle+\frac{\alpha}{8\sqrt{2}}$
$|110011101\rangle-\frac{\alpha}{8\sqrt{2}}|100001110\rangle+\frac{\alpha}{8\sqrt{2}}|100001111\rangle+\frac{\beta}{8\sqrt{2}}|010000000\rangle+\frac{\beta}{8\sqrt{2}}|010000001\rangle+\frac{\beta}{8\sqrt{2}}|000010010\rangle+\frac{\beta}{8\sqrt{2}}$
$|000010011\rangle-\frac{\beta}{8\sqrt{2}}|010000100\rangle-\frac{\beta}{8\sqrt{2}}|010000101\rangle-\frac{\beta}{8\sqrt{2}}|000010110\rangle-\frac{\beta}{8\sqrt{2}}|000010111\rangle-\frac{\beta}{8\sqrt{2}}|111001000\rangle+\frac{\beta}{8\sqrt{2}}$
$|111001001\rangle+\frac{\beta}{8\sqrt{2}}|101011010\rangle-\frac{\beta}{8\sqrt{2}}|101011011\rangle+\frac{\beta}{8\sqrt{2}}|111001100\rangle-\frac{\beta}{8\sqrt{2}}|111001101\rangle-\frac{\beta}{8\sqrt{2}}|101011110\rangle+\frac{\beta}{8\sqrt{2}}$
$|101011111\rangle+\frac{\beta}{8\sqrt{2}}|000010000\rangle+\frac{\beta}{8\sqrt{2}}|000010001\rangle+\frac{\beta}{8\sqrt{2}}|010000010\rangle+\frac{\beta}{8\sqrt{2}}|010000011\rangle-\frac{\beta}{8\sqrt{2}}|000010100\rangle-\frac{\beta}{8\sqrt{2}}$
$|000010101\rangle-\frac{\beta}{8\sqrt{2}}|010000110\rangle-\frac{\beta}{8\sqrt{2}}|010000111\rangle+\frac{\beta}{8\sqrt{2}}|101011000\rangle-\frac{\beta}{8\sqrt{2}}|101011001\rangle-\frac{\beta}{8\sqrt{2}}|111001010\rangle+\frac{\beta}{8\sqrt{2}}$
$|111001011\rangle-\frac{\beta}{8\sqrt{2}}|101011100\rangle+\frac{\beta}{8\sqrt{2}}|101011101\rangle+\frac{\beta}{8\sqrt{2}}|111001110\rangle-\frac{\beta}{8\sqrt{2}}|111001111\rangle+\frac{\beta}{8\sqrt{2}}|100100000\rangle-\frac{\beta}{8\sqrt{2}}$
$|100100001\rangle-\frac{\beta}{8\sqrt{2}}|110110010\rangle+\frac{\beta}{8\sqrt{2}}|110110011\rangle-\frac{\beta}{8\sqrt{2}}|100100100\rangle+\frac{\beta}{8\sqrt{2}}|100100101\rangle+\frac{\beta}{8\sqrt{2}}|110110110\rangle-\frac{\beta}{8\sqrt{2}}$
$|110110111\rangle-\frac{\beta}{8\sqrt{2}}|001101000\rangle-\frac{\beta}{8\sqrt{2}}|001101001\rangle-\frac{\beta}{8\sqrt{2}}|011111010\rangle-\frac{\beta}{8\sqrt{2}}|011111011\rangle+\frac{\beta}{8\sqrt{2}}|001101100\rangle+\frac{\beta}{8\sqrt{2}}$
$|001101101\rangle+\frac{\beta}{8\sqrt{2}}|011111110\rangle+\frac{\beta}{8\sqrt{2}}|011111111\rangle-\frac{\beta}{8\sqrt{2}}|110110000\rangle+\frac{\beta}{8\sqrt{2}}|110110001\rangle+\frac{\beta}{8\sqrt{2}}|100100010\rangle-\frac{\beta}{8\sqrt{2}}$
$|100100011\rangle+\frac{\beta}{8\sqrt{2}}|110110100\rangle-\frac{\beta}{8\sqrt{2}}|110110101\rangle-\frac{\beta}{8\sqrt{2}}|100100110\rangle+\frac{\beta}{8\sqrt{2}}|100100111\rangle-\frac{\beta}{8\sqrt{2}}|011111000\rangle-\frac{\beta}{8\sqrt{2}}$
$|011111001\rangle-\frac{\beta}{8\sqrt{2}}|001101010\rangle-\frac{\beta}{8\sqrt{2}}|001101011\rangle+\frac{\beta}{8\sqrt{2}}|011111100\rangle+\frac{\beta}{8\sqrt{2}}|011111101\rangle+\frac{\beta}{8\sqrt{2}}|001101110\rangle+\frac{\beta}{8\sqrt{2}}$

$|001101111\rangle$- $\frac{\beta}{8\sqrt{2}}$ $|001100000\rangle$- $\frac{\beta}{8\sqrt{2}}$ $|001100001\rangle$- $\frac{\beta}{8\sqrt{2}}$ $|011110010\rangle$- $\frac{\beta}{8\sqrt{2}}$ $|011110011\rangle$+ $\frac{\beta}{8\sqrt{2}}$ $|001100100\rangle$+ $\frac{\beta}{8\sqrt{2}}$
$|001100101\rangle$+ $\frac{\beta}{8\sqrt{2}}$ $|011110110\rangle$+ $\frac{\beta}{8\sqrt{2}}$ $|011110111\rangle$+ $\frac{\beta}{8\sqrt{2}}$ $|100101000\rangle$- $\frac{\beta}{8\sqrt{2}}$ $|100101001\rangle$- $\frac{\beta}{8\sqrt{2}}$ $|110111010\rangle$+ $\frac{\beta}{8\sqrt{2}}$
$|110111011\rangle$- $\frac{\beta}{8\sqrt{2}}$ $|100101100\rangle$+ $\frac{\beta}{8\sqrt{2}}$ $|100101101\rangle$+ $\frac{\beta}{8\sqrt{2}}$ $|110111110\rangle$- $\frac{\beta}{8\sqrt{2}}$ $|110111111\rangle$- $\frac{\beta}{8\sqrt{2}}$ $|011110000\rangle$- $\frac{\beta}{8\sqrt{2}}$
$|011110001\rangle$- $\frac{\beta}{8\sqrt{2}}$ $|001100010\rangle$- $\frac{\beta}{8\sqrt{2}}$ $|001100011\rangle$+ $\frac{\beta}{8\sqrt{2}}$ $|011110100\rangle$+ $\frac{\beta}{8\sqrt{2}}$ $|011110101\rangle$+ $\frac{\beta}{8\sqrt{2}}$ $|001100110\rangle$+ $\frac{\beta}{8\sqrt{2}}$
$|001100111\rangle$- $\frac{\beta}{8\sqrt{2}}$ $|110111000\rangle$+ $\frac{\beta}{8\sqrt{2}}$ $|110111001\rangle$+ $\frac{\beta}{8\sqrt{2}}$ $|100101010\rangle$- $\frac{\beta}{8\sqrt{2}}$ $|100101011\rangle$+ $\frac{\beta}{8\sqrt{2}}$ $|110111100\rangle$- $\frac{\beta}{8\sqrt{2}}$
$|110111101\rangle$- $\frac{\beta}{8\sqrt{2}}$ $|100101110\rangle$+ $\frac{\beta}{8\sqrt{2}}$ $|100101111\rangle$- $\frac{\beta}{8\sqrt{2}}$ $|111000000\rangle$+ $\frac{\beta}{8\sqrt{2}}$ $|111000001\rangle$+ $\frac{\beta}{8\sqrt{2}}$ $|101010010\rangle$- $\frac{\beta}{8\sqrt{2}}$
$|101010011\rangle$+ $\frac{\beta}{8\sqrt{2}}$ $|111000100\rangle$- $\frac{\beta}{8\sqrt{2}}$ $|111000101\rangle$- $\frac{\beta}{8\sqrt{2}}$ $|101010110\rangle$+ $\frac{\beta}{8\sqrt{2}}$ $|101010111\rangle$+ $\frac{\beta}{8\sqrt{2}}$ $|010001000\rangle$+ $\frac{\beta}{8\sqrt{2}}$
$|010001001\rangle$+ $\frac{\beta}{8\sqrt{2}}$ $|000011010\rangle$+ $\frac{\beta}{8\sqrt{2}}$ $|000011011\rangle$- $\frac{\beta}{8\sqrt{2}}$ $|010001100\rangle$- $\frac{\beta}{8\sqrt{2}}$ $|010001101\rangle$- $\frac{\beta}{8\sqrt{2}}$ $|000011110\rangle$- $\frac{\beta}{8\sqrt{2}}$
$|000011111\rangle$+ $\frac{\beta}{8\sqrt{2}}$ $|101010000\rangle$- $\frac{\beta}{8\sqrt{2}}$ $|101010001\rangle$- $\frac{\beta}{8\sqrt{2}}$ $|111000010\rangle$+ $\frac{\beta}{8\sqrt{2}}$ $|111000011\rangle$- $\frac{\beta}{8\sqrt{2}}$ $|101010100\rangle$+ $\frac{\beta}{8\sqrt{2}}$
$|101010101\rangle$+ $\frac{\beta}{8\sqrt{2}}$ $|111000110\rangle$- $\frac{\beta}{8\sqrt{2}}$ $|111000111\rangle$+ $\frac{\beta}{8\sqrt{2}}$ $|000011000\rangle$+ $\frac{\beta}{8\sqrt{2}}$ $|000011001\rangle$+ $\frac{\beta}{8\sqrt{2}}$ $|010001010\rangle$+ $\frac{\beta}{8\sqrt{2}}$
$|010001011\rangle$-$\frac{\beta}{8\sqrt{2}}$ $|000011100\rangle$-$\frac{\beta}{8\sqrt{2}}$ $|000011101\rangle$-$\frac{\beta}{8\sqrt{2}}$ $|010001110\rangle$-$\frac{\beta}{8\sqrt{2}}$ $|010001111\rangle$.

- Porte X(3) :

$|\psi_3\rangle$ = $\frac{\alpha}{8\sqrt{2}}$ $|100000000\rangle$- $\frac{\alpha}{8\sqrt{2}}$ $|101000001\rangle$+ $\frac{\alpha}{8\sqrt{2}}$ $|110010010\rangle$- $\frac{\alpha}{8\sqrt{2}}$ $|111010011\rangle$- $\frac{\alpha}{8\sqrt{2}}$ $|100000100\rangle$+ $\frac{\alpha}{8\sqrt{2}}$
$|101000101\rangle$- $\frac{\alpha}{8\sqrt{2}}$ $|110010110\rangle$+ $\frac{\alpha}{8\sqrt{2}}$ $|111010111\rangle$+ $\frac{\alpha}{8\sqrt{2}}$ $|001001000\rangle$+ $\frac{\alpha}{8\sqrt{2}}$ $|000001001\rangle$- $\frac{\alpha}{8\sqrt{2}}$ $|011011010\rangle$- $\frac{\alpha}{8\sqrt{2}}$
$|010011011\rangle$- $\frac{\alpha}{8\sqrt{2}}$ $|001001100\rangle$- $\frac{\alpha}{8\sqrt{2}}$ $|000001101\rangle$+ $\frac{\alpha}{8\sqrt{2}}$ $|011011110\rangle$+ $\frac{\alpha}{8\sqrt{2}}$ $|010011111\rangle$+ $\frac{\alpha}{8\sqrt{2}}$ $|110010000\rangle$- $\frac{\alpha}{8\sqrt{2}}$
$|111010001\rangle$+ $\frac{\alpha}{8\sqrt{2}}$ $|100000010\rangle$- $\frac{\alpha}{8\sqrt{2}}$ $|101000011\rangle$- $\frac{\alpha}{8\sqrt{2}}$ $|110010100\rangle$+ $\frac{\alpha}{8\sqrt{2}}$ $|111010101\rangle$- $\frac{\alpha}{8\sqrt{2}}$ $|100000110\rangle$+ $\frac{\alpha}{8\sqrt{2}}$
$|101000111\rangle$- $\frac{\alpha}{8\sqrt{2}}$ $|011011000\rangle$- $\frac{\alpha}{8\sqrt{2}}$ $|010011001\rangle$+ $\frac{\alpha}{8\sqrt{2}}$ $|001001010\rangle$+ $\frac{\alpha}{8\sqrt{2}}$ $|000001011\rangle$+ $\frac{\alpha}{8\sqrt{2}}$ $|011011100\rangle$+ $\frac{\alpha}{8\sqrt{2}}$
$|010011101\rangle$- $\frac{\alpha}{8\sqrt{2}}$ $|001001110\rangle$- $\frac{\alpha}{8\sqrt{2}}$ $|000001111\rangle$+ $\frac{\alpha}{8\sqrt{2}}$ $|010100000\rangle$+ $\frac{\alpha}{8\sqrt{2}}$ $|011100001\rangle$- $\frac{\alpha}{8\sqrt{2}}$ $|000110010\rangle$- $\frac{\alpha}{8\sqrt{2}}$
$|001110011\rangle$- $\frac{\alpha}{8\sqrt{2}}$ $|010100100\rangle$- $\frac{\alpha}{8\sqrt{2}}$ $|011100101\rangle$+ $\frac{\alpha}{8\sqrt{2}}$ $|000110110\rangle$+ $\frac{\alpha}{8\sqrt{2}}$ $|001110111\rangle$+ $\frac{\alpha}{8\sqrt{2}}$ $|111101000\rangle$- $\frac{\alpha}{8\sqrt{2}}$
$|110101001\rangle$+ $\frac{\alpha}{8\sqrt{2}}$ $|101111010\rangle$- $\frac{\alpha}{8\sqrt{2}}$ $|100111011\rangle$- $\frac{\alpha}{8\sqrt{2}}$ $|111101100\rangle$+ $\frac{\alpha}{8\sqrt{2}}$ $|110101101\rangle$- $\frac{\alpha}{8\sqrt{2}}$ $|101111110\rangle$+ $\frac{\alpha}{8\sqrt{2}}$
$|100111111\rangle$- $\frac{\alpha}{8\sqrt{2}}$ $|000110000\rangle$- $\frac{\alpha}{8\sqrt{2}}$ $|001110001\rangle$+ $\frac{\alpha}{8\sqrt{2}}$ $|010100010\rangle$+ $\frac{\alpha}{8\sqrt{2}}$ $|011100011\rangle$+ $\frac{\alpha}{8\sqrt{2}}$ $|000110100\rangle$+ $\frac{\alpha}{8\sqrt{2}}$
$|001110101\rangle$- $\frac{\alpha}{8\sqrt{2}}$ $|010100110\rangle$- $\frac{\alpha}{8\sqrt{2}}$ $|011100111\rangle$+ $\frac{\alpha}{8\sqrt{2}}$ $|101111000\rangle$- $\frac{\alpha}{8\sqrt{2}}$ $|100111001\rangle$+ $\frac{\alpha}{8\sqrt{2}}$ $|111101010\rangle$- $\frac{\alpha}{8\sqrt{2}}$
$|110101011\rangle$- $\frac{\alpha}{8\sqrt{2}}$ $|101111100\rangle$+ $\frac{\alpha}{8\sqrt{2}}$ $|100111101\rangle$- $\frac{\alpha}{8\sqrt{2}}$ $|111101110\rangle$+ $\frac{\alpha}{8\sqrt{2}}$ $|110101111\rangle$+ $\frac{\alpha}{8\sqrt{2}}$ $|111100000\rangle$- $\frac{\alpha}{8\sqrt{2}}$
$|110100001\rangle$+ $\frac{\alpha}{8\sqrt{2}}$ $|101110010\rangle$- $\frac{\alpha}{8\sqrt{2}}$ $|100110011\rangle$- $\frac{\alpha}{8\sqrt{2}}$ $|111100100\rangle$+ $\frac{\alpha}{8\sqrt{2}}$ $|110100101\rangle$- $\frac{\alpha}{8\sqrt{2}}$ $|101110110\rangle$+ $\frac{\alpha}{8\sqrt{2}}$
$|100110111\rangle$+ $\frac{\alpha}{8\sqrt{2}}$ $|010101000\rangle$+ $\frac{\alpha}{8\sqrt{2}}$ $|011101001\rangle$- $\frac{\alpha}{8\sqrt{2}}$ $|000111010\rangle$- $\frac{\alpha}{8\sqrt{2}}$ $|001111011\rangle$- $\frac{\alpha}{8\sqrt{2}}$ $|010101100\rangle$- $\frac{\alpha}{8\sqrt{2}}$
$|011101101\rangle$+ $\frac{\alpha}{8\sqrt{2}}$ $|000111110\rangle$+ $\frac{\alpha}{8\sqrt{2}}$ $|001111111\rangle$+ $\frac{\alpha}{8\sqrt{2}}$ $|101110000\rangle$- $\frac{\alpha}{8\sqrt{2}}$ $|100110001\rangle$+ $\frac{\alpha}{8\sqrt{2}}$ $|111100010\rangle$- $\frac{\alpha}{8\sqrt{2}}$
$|110100011\rangle$- $\frac{\alpha}{8\sqrt{2}}$ $|101110100\rangle$+ $\frac{\alpha}{8\sqrt{2}}$ $|100110101\rangle$- $\frac{\alpha}{8\sqrt{2}}$ $|111100110\rangle$+ $\frac{\alpha}{8\sqrt{2}}$ $|110100111\rangle$- $\frac{\alpha}{8\sqrt{2}}$ $|000111000\rangle$- $\frac{\alpha}{8\sqrt{2}}$
$|001111001\rangle$+ $\frac{\alpha}{8\sqrt{2}}$ $|010101010\rangle$+ $\frac{\alpha}{8\sqrt{2}}$ $|011101011\rangle$+ $\frac{\alpha}{8\sqrt{2}}$ $|000111100\rangle$+ $\frac{\alpha}{8\sqrt{2}}$ $|001111101\rangle$- $\frac{\alpha}{8\sqrt{2}}$ $|010101110\rangle$- $\frac{\alpha}{8\sqrt{2}}$
$|011101111\rangle$+ $\frac{\alpha}{8\sqrt{2}}$ $|001000000\rangle$+ $\frac{\alpha}{8\sqrt{2}}$ $|000000001\rangle$- $\frac{\alpha}{8\sqrt{2}}$ $|011010010\rangle$- $\frac{\alpha}{8\sqrt{2}}$ $|010010011\rangle$- $\frac{\alpha}{8\sqrt{2}}$ $|001000100\rangle$- $\frac{\alpha}{8\sqrt{2}}$
$|000000101\rangle$+ $\frac{\alpha}{8\sqrt{2}}$ $|011010110\rangle$+ $\frac{\alpha}{8\sqrt{2}}$ $|010010111\rangle$+ $\frac{\alpha}{8\sqrt{2}}$ $|100001000\rangle$- $\frac{\alpha}{8\sqrt{2}}$ $|101001001\rangle$+ $\frac{\alpha}{8\sqrt{2}}$ $|110011010\rangle$- $\frac{\alpha}{8\sqrt{2}}$
$|111011011\rangle$- $\frac{\alpha}{8\sqrt{2}}$ $|100001100\rangle$+ $\frac{\alpha}{8\sqrt{2}}$ $|101001101\rangle$- $\frac{\alpha}{8\sqrt{2}}$ $|110011110\rangle$+ $\frac{\alpha}{8\sqrt{2}}$ $|111011111\rangle$- $\frac{\alpha}{8\sqrt{2}}$ $|011010000\rangle$- $\frac{\alpha}{8\sqrt{2}}$
$|010010001\rangle$+ $\frac{\alpha}{8\sqrt{2}}$ $|001000010\rangle$+ $\frac{\alpha}{8\sqrt{2}}$ $|000000011\rangle$+ $\frac{\alpha}{8\sqrt{2}}$ $|011010100\rangle$+ $\frac{\alpha}{8\sqrt{2}}$ $|010010101\rangle$- $\frac{\alpha}{8\sqrt{2}}$ $|001000110\rangle$- $\frac{\alpha}{8\sqrt{2}}$
$|000000111\rangle$+ $\frac{\alpha}{8\sqrt{2}}$ $|110011000\rangle$- $\frac{\alpha}{8\sqrt{2}}$ $|111011001\rangle$+ $\frac{\alpha}{8\sqrt{2}}$ $|100001010\rangle$- $\frac{\alpha}{8\sqrt{2}}$ $|101001011\rangle$- $\frac{\alpha}{8\sqrt{2}}$ $|110011100\rangle$+ $\frac{\alpha}{8\sqrt{2}}$
$|111011101\rangle$- $\frac{\alpha}{8\sqrt{2}}$ $|100001110\rangle$+ $\frac{\alpha}{8\sqrt{2}}$ $|101001111\rangle$+ $\frac{\beta}{8\sqrt{2}}$ $|010000000\rangle$+ $\frac{\beta}{8\sqrt{2}}$ $|011000001\rangle$+ $\frac{\beta}{8\sqrt{2}}$ $|000010010\rangle$+ $\frac{\beta}{8\sqrt{2}}$
$|001010011\rangle$- $\frac{\beta}{8\sqrt{2}}$ $|010000100\rangle$- $\frac{\beta}{8\sqrt{2}}$ $|011000101\rangle$- $\frac{\beta}{8\sqrt{2}}$ $|000010110\rangle$- $\frac{\beta}{8\sqrt{2}}$ $|001010111\rangle$- $\frac{\beta}{8\sqrt{2}}$ $|111001000\rangle$+ $\frac{\beta}{8\sqrt{2}}$
$|110001001\rangle$+ $\frac{\beta}{8\sqrt{2}}$ $|101011010\rangle$- $\frac{\beta}{8\sqrt{2}}$ $|100011011\rangle$+ $\frac{\beta}{8\sqrt{2}}$ $|111001100\rangle$- $\frac{\beta}{8\sqrt{2}}$ $|110001101\rangle$- $\frac{\beta}{8\sqrt{2}}$ $|101011110\rangle$+ $\frac{\beta}{8\sqrt{2}}$
$|100011111\rangle$+ $\frac{\beta}{8\sqrt{2}}$ $|000010000\rangle$+ $\frac{\beta}{8\sqrt{2}}$ $|001010001\rangle$+ $\frac{\beta}{8\sqrt{2}}$ $|010000010\rangle$+ $\frac{\beta}{8\sqrt{2}}$ $|011000011\rangle$- $\frac{\beta}{8\sqrt{2}}$ $|000010100\rangle$- $\frac{\beta}{8\sqrt{2}}$
$|001010101\rangle$- $\frac{\beta}{8\sqrt{2}}$ $|010000110\rangle$- $\frac{\beta}{8\sqrt{2}}$ $|011000111\rangle$+ $\frac{\beta}{8\sqrt{2}}$ $|101011000\rangle$- $\frac{\beta}{8\sqrt{2}}$ $|100011001\rangle$- $\frac{\beta}{8\sqrt{2}}$ $|111001010\rangle$+ $\frac{\beta}{8\sqrt{2}}$
$|110001011\rangle$- $\frac{\beta}{8\sqrt{2}}$ $|101011100\rangle$+ $\frac{\beta}{8\sqrt{2}}$ $|100011101\rangle$+ $\frac{\beta}{8\sqrt{2}}$ $|111001110\rangle$- $\frac{\beta}{8\sqrt{2}}$ $|110001111\rangle$+ $\frac{\beta}{8\sqrt{2}}$ $|100100000\rangle$- $\frac{\beta}{8\sqrt{2}}$

$|101100001\rangle$- $\frac{\beta}{8\sqrt{2}}$ $|110110010\rangle$+ $\frac{\beta}{8\sqrt{2}}$ $|111110011\rangle$- $\frac{\beta}{8\sqrt{2}}$ $|100100100\rangle$+ $\frac{\beta}{8\sqrt{2}}$ $|101100101\rangle$+ $\frac{\beta}{8\sqrt{2}}$ $|110110110\rangle$- $\frac{\beta}{8\sqrt{2}}$
$|111110111\rangle$- $\frac{\beta}{8\sqrt{2}}$ $|001101000\rangle$- $\frac{\beta}{8\sqrt{2}}$ $|000101001\rangle$- $\frac{\beta}{8\sqrt{2}}$ $|011111010\rangle$- $\frac{\beta}{8\sqrt{2}}$ $|010111011\rangle$+ $\frac{\beta}{8\sqrt{2}}$ $|001101100\rangle$+ $\frac{\beta}{8\sqrt{2}}$
$|000101101\rangle$+ $\frac{\beta}{8\sqrt{2}}$ $|011111110\rangle$+ $\frac{\beta}{8\sqrt{2}}$ $|010111111\rangle$- $\frac{\beta}{8\sqrt{2}}$ $|110110000\rangle$+ $\frac{\beta}{8\sqrt{2}}$ $|111110001\rangle$+ $\frac{\beta}{8\sqrt{2}}$ $|100100010\rangle$- $\frac{\beta}{8\sqrt{2}}$
$|101100011\rangle$+ $\frac{\beta}{8\sqrt{2}}$ $|110110100\rangle$- $\frac{\beta}{8\sqrt{2}}$ $|111110101\rangle$- $\frac{\beta}{8\sqrt{2}}$ $|100100110\rangle$+ $\frac{\beta}{8\sqrt{2}}$ $|101100111\rangle$- $\frac{\beta}{8\sqrt{2}}$ $|011111000\rangle$- $\frac{\beta}{8\sqrt{2}}$
$|010111001\rangle$- $\frac{\beta}{8\sqrt{2}}$ $|001101010\rangle$- $\frac{\beta}{8\sqrt{2}}$ $|000101011\rangle$+ $\frac{\beta}{8\sqrt{2}}$ $|011111100\rangle$+ $\frac{\beta}{8\sqrt{2}}$ $|010111101\rangle$+ $\frac{\beta}{8\sqrt{2}}$ $|001101110\rangle$+ $\frac{\beta}{8\sqrt{2}}$
$|000101111\rangle$- $\frac{\beta}{8\sqrt{2}}$ $|001100000\rangle$- $\frac{\beta}{8\sqrt{2}}$ $|000100001\rangle$- $\frac{\beta}{8\sqrt{2}}$ $|011110010\rangle$- $\frac{\beta}{8\sqrt{2}}$ $|010110011\rangle$+ $\frac{\beta}{8\sqrt{2}}$ $|001100100\rangle$+ $\frac{\beta}{8\sqrt{2}}$
$|000100101\rangle$+ $\frac{\beta}{8\sqrt{2}}$ $|011110110\rangle$+ $\frac{\beta}{8\sqrt{2}}$ $|010110111\rangle$+ $\frac{\beta}{8\sqrt{2}}$ $|100101000\rangle$- $\frac{\beta}{8\sqrt{2}}$ $|101101001\rangle$- $\frac{\beta}{8\sqrt{2}}$ $|110111010\rangle$+ $\frac{\beta}{8\sqrt{2}}$
$|111111011\rangle$- $\frac{\beta}{8\sqrt{2}}$ $|100101100\rangle$+ $\frac{\beta}{8\sqrt{2}}$ $|101101101\rangle$+ $\frac{\beta}{8\sqrt{2}}$ $|110111110\rangle$- $\frac{\beta}{8\sqrt{2}}$ $|111111111\rangle$- $\frac{\beta}{8\sqrt{2}}$ $|011110000\rangle$- $\frac{\beta}{8\sqrt{2}}$
$|010110001\rangle$- $\frac{\beta}{8\sqrt{2}}$ $|001100010\rangle$- $\frac{\beta}{8\sqrt{2}}$ $|000100011\rangle$+ $\frac{\beta}{8\sqrt{2}}$ $|011110100\rangle$+ $\frac{\beta}{8\sqrt{2}}$ $|010110101\rangle$+ $\frac{\beta}{8\sqrt{2}}$ $|001100110\rangle$+ $\frac{\beta}{8\sqrt{2}}$
$|000100111\rangle$- $\frac{\beta}{8\sqrt{2}}$ $|110111000\rangle$+ $\frac{\beta}{8\sqrt{2}}$ $|111111001\rangle$+ $\frac{\beta}{8\sqrt{2}}$ $|100101010\rangle$- $\frac{\beta}{8\sqrt{2}}$ $|101101011\rangle$+ $\frac{\beta}{8\sqrt{2}}$ $|110111100\rangle$- $\frac{\beta}{8\sqrt{2}}$
$|111111101\rangle$- $\frac{\beta}{8\sqrt{2}}$ $|100101110\rangle$+ $\frac{\beta}{8\sqrt{2}}$ $|101101111\rangle$- $\frac{\beta}{8\sqrt{2}}$ $|111000000\rangle$+ $\frac{\beta}{8\sqrt{2}}$ $|110000001\rangle$+ $\frac{\beta}{8\sqrt{2}}$ $|101010010\rangle$- $\frac{\beta}{8\sqrt{2}}$
$|100010011\rangle$+ $\frac{\beta}{8\sqrt{2}}$ $|111000100\rangle$- $\frac{\beta}{8\sqrt{2}}$ $|110000101\rangle$- $\frac{\beta}{8\sqrt{2}}$ $|101010110\rangle$+ $\frac{\beta}{8\sqrt{2}}$ $|100010111\rangle$+ $\frac{\beta}{8\sqrt{2}}$ $|010001000\rangle$+ $\frac{\beta}{8\sqrt{2}}$
$|011001001\rangle$+ $\frac{\beta}{8\sqrt{2}}$ $|000011010\rangle$+ $\frac{\beta}{8\sqrt{2}}$ $|001011011\rangle$- $\frac{\beta}{8\sqrt{2}}$ $|010001100\rangle$- $\frac{\beta}{8\sqrt{2}}$ $|011001101\rangle$- $\frac{\beta}{8\sqrt{2}}$ $|000011110\rangle$- $\frac{\beta}{8\sqrt{2}}$
$|001011111\rangle$+ $\frac{\beta}{8\sqrt{2}}$ $|101010000\rangle$- $\frac{\beta}{8\sqrt{2}}$ $|100010001\rangle$- $\frac{\beta}{8\sqrt{2}}$ $|111000010\rangle$+ $\frac{\beta}{8\sqrt{2}}$ $|110000011\rangle$- $\frac{\beta}{8\sqrt{2}}$ $|101010100\rangle$+ $\frac{\beta}{8\sqrt{2}}$
$|100010101\rangle$+ $\frac{\beta}{8\sqrt{2}}$ $|111000110\rangle$- $\frac{\beta}{8\sqrt{2}}$ $|110000111\rangle$+ $\frac{\beta}{8\sqrt{2}}$ $|000011000\rangle$+ $\frac{\beta}{8\sqrt{2}}$ $|001011001\rangle$+ $\frac{\beta}{8\sqrt{2}}$ $|010001010\rangle$+ $\frac{\beta}{8\sqrt{2}}$
$|011001011\rangle$-$\frac{\beta}{8\sqrt{2}}$ $|000011100\rangle$-$\frac{\beta}{8\sqrt{2}}$ $|001011101\rangle$-$\frac{\beta}{8\sqrt{2}}$ $|010001110\rangle$-$\frac{\beta}{8\sqrt{2}}$ $|011001111\rangle$.

- Porte X(4) :

$|\psi_3\rangle$ = $\frac{\alpha}{8\sqrt{2}}$ $|100000000\rangle$- $\frac{\alpha}{8\sqrt{2}}$ $|101100001\rangle$+ $\frac{\alpha}{8\sqrt{2}}$ $|110010010\rangle$- $\frac{\alpha}{8\sqrt{2}}$ $|111110011\rangle$- $\frac{\alpha}{8\sqrt{2}}$ $|100000100\rangle$+ $\frac{\alpha}{8\sqrt{2}}$
$|101100101\rangle$- $\frac{\alpha}{8\sqrt{2}}$ $|110010110\rangle$+ $\frac{\alpha}{8\sqrt{2}}$ $|111110111\rangle$+ $\frac{\alpha}{8\sqrt{2}}$ $|001001000\rangle$+ $\frac{\alpha}{8\sqrt{2}}$ $|000101001\rangle$- $\frac{\alpha}{8\sqrt{2}}$ $|011011010\rangle$- $\frac{\alpha}{8\sqrt{2}}$
$|010111011\rangle$- $\frac{\alpha}{8\sqrt{2}}$ $|001001100\rangle$- $\frac{\alpha}{8\sqrt{2}}$ $|000101101\rangle$+ $\frac{\alpha}{8\sqrt{2}}$ $|011011110\rangle$+ $\frac{\alpha}{8\sqrt{2}}$ $|010111111\rangle$+ $\frac{\alpha}{8\sqrt{2}}$ $|110010000\rangle$- $\frac{\alpha}{8\sqrt{2}}$
$|111110001\rangle$+ $\frac{\alpha}{8\sqrt{2}}$ $|100000010\rangle$- $\frac{\alpha}{8\sqrt{2}}$ $|101100011\rangle$- $\frac{\alpha}{8\sqrt{2}}$ $|110010100\rangle$+ $\frac{\alpha}{8\sqrt{2}}$ $|111110101\rangle$- $\frac{\alpha}{8\sqrt{2}}$ $|100000110\rangle$+ $\frac{\alpha}{8\sqrt{2}}$
$|101100111\rangle$- $\frac{\alpha}{8\sqrt{2}}$ $|011011000\rangle$- $\frac{\alpha}{8\sqrt{2}}$ $|010111001\rangle$+ $\frac{\alpha}{8\sqrt{2}}$ $|001001010\rangle$+ $\frac{\alpha}{8\sqrt{2}}$ $|000101011\rangle$+ $\frac{\alpha}{8\sqrt{2}}$ $|011011100\rangle$+ $\frac{\alpha}{8\sqrt{2}}$
$|010111101\rangle$- $\frac{\alpha}{8\sqrt{2}}$ $|001001110\rangle$- $\frac{\alpha}{8\sqrt{2}}$ $|000101111\rangle$+ $\frac{\alpha}{8\sqrt{2}}$ $|010100000\rangle$+ $\frac{\alpha}{8\sqrt{2}}$ $|011000001\rangle$- $\frac{\alpha}{8\sqrt{2}}$ $|000110010\rangle$- $\frac{\alpha}{8\sqrt{2}}$
$|001010011\rangle$- $\frac{\alpha}{8\sqrt{2}}$ $|010100100\rangle$- $\frac{\alpha}{8\sqrt{2}}$ $|011000101\rangle$+ $\frac{\alpha}{8\sqrt{2}}$ $|000110110\rangle$+ $\frac{\alpha}{8\sqrt{2}}$ $|001010111\rangle$+ $\frac{\alpha}{8\sqrt{2}}$ $|111101000\rangle$- $\frac{\alpha}{8\sqrt{2}}$
$|110001001\rangle$+ $\frac{\alpha}{8\sqrt{2}}$ $|101111010\rangle$- $\frac{\alpha}{8\sqrt{2}}$ $|100011011\rangle$- $\frac{\alpha}{8\sqrt{2}}$ $|111101100\rangle$+ $\frac{\alpha}{8\sqrt{2}}$ $|110001101\rangle$- $\frac{\alpha}{8\sqrt{2}}$ $|101111110\rangle$+ $\frac{\alpha}{8\sqrt{2}}$
$|100011111\rangle$- $\frac{\alpha}{8\sqrt{2}}$ $|000110000\rangle$- $\frac{\alpha}{8\sqrt{2}}$ $|001010001\rangle$+ $\frac{\alpha}{8\sqrt{2}}$ $|010100010\rangle$+ $\frac{\alpha}{8\sqrt{2}}$ $|011000011\rangle$+ $\frac{\alpha}{8\sqrt{2}}$ $|000110100\rangle$+ $\frac{\alpha}{8\sqrt{2}}$
$|001010101\rangle$- $\frac{\alpha}{8\sqrt{2}}$ $|010100110\rangle$- $\frac{\alpha}{8\sqrt{2}}$ $|011000111\rangle$+ $\frac{\alpha}{8\sqrt{2}}$ $|101111000\rangle$- $\frac{\alpha}{8\sqrt{2}}$ $|100011001\rangle$+ $\frac{\alpha}{8\sqrt{2}}$ $|111101010\rangle$- $\frac{\alpha}{8\sqrt{2}}$
$|110001011\rangle$- $\frac{\alpha}{8\sqrt{2}}$ $|101111100\rangle$+ $\frac{\alpha}{8\sqrt{2}}$ $|100011101\rangle$- $\frac{\alpha}{8\sqrt{2}}$ $|111101110\rangle$+ $\frac{\alpha}{8\sqrt{2}}$ $|110001111\rangle$+ $\frac{\alpha}{8\sqrt{2}}$ $|111100000\rangle$- $\frac{\alpha}{8\sqrt{2}}$
$|110000001\rangle$+ $\frac{\alpha}{8\sqrt{2}}$ $|101110010\rangle$- $\frac{\alpha}{8\sqrt{2}}$ $|100010011\rangle$- $\frac{\alpha}{8\sqrt{2}}$ $|111100100\rangle$+ $\frac{\alpha}{8\sqrt{2}}$ $|110000101\rangle$- $\frac{\alpha}{8\sqrt{2}}$ $|101110110\rangle$+ $\frac{\alpha}{8\sqrt{2}}$
$|100010111\rangle$+ $\frac{\alpha}{8\sqrt{2}}$ $|010101000\rangle$+ $\frac{\alpha}{8\sqrt{2}}$ $|011001001\rangle$- $\frac{\alpha}{8\sqrt{2}}$ $|000111010\rangle$- $\frac{\alpha}{8\sqrt{2}}$ $|001011011\rangle$- $\frac{\alpha}{8\sqrt{2}}$ $|010101100\rangle$- $\frac{\alpha}{8\sqrt{2}}$
$|011001101\rangle$+ $\frac{\alpha}{8\sqrt{2}}$ $|000111110\rangle$+ $\frac{\alpha}{8\sqrt{2}}$ $|001011111\rangle$+ $\frac{\alpha}{8\sqrt{2}}$ $|101110000\rangle$- $\frac{\alpha}{8\sqrt{2}}$ $|100010001\rangle$+ $\frac{\alpha}{8\sqrt{2}}$ $|111100010\rangle$- $\frac{\alpha}{8\sqrt{2}}$
$|110000011\rangle$- $\frac{\alpha}{8\sqrt{2}}$ $|101110100\rangle$+ $\frac{\alpha}{8\sqrt{2}}$ $|100010101\rangle$- $\frac{\alpha}{8\sqrt{2}}$ $|111100110\rangle$+ $\frac{\alpha}{8\sqrt{2}}$ $|110000111\rangle$- $\frac{\alpha}{8\sqrt{2}}$ $|000111000\rangle$- $\frac{\alpha}{8\sqrt{2}}$
$|001011001\rangle$+ $\frac{\alpha}{8\sqrt{2}}$ $|010101010\rangle$+ $\frac{\alpha}{8\sqrt{2}}$ $|011001011\rangle$+ $\frac{\alpha}{8\sqrt{2}}$ $|000111100\rangle$+ $\frac{\alpha}{8\sqrt{2}}$ $|001011101\rangle$- $\frac{\alpha}{8\sqrt{2}}$ $|010101110\rangle$- $\frac{\alpha}{8\sqrt{2}}$
$|011001111\rangle$+ $\frac{\alpha}{8\sqrt{2}}$ $|001000000\rangle$+ $\frac{\alpha}{8\sqrt{2}}$ $|000100001\rangle$- $\frac{\alpha}{8\sqrt{2}}$ $|011010010\rangle$- $\frac{\alpha}{8\sqrt{2}}$ $|010110011\rangle$- $\frac{\alpha}{8\sqrt{2}}$ $|001000100\rangle$- $\frac{\alpha}{8\sqrt{2}}$
$|000100101\rangle$+ $\frac{\alpha}{8\sqrt{2}}$ $|011010110\rangle$+ $\frac{\alpha}{8\sqrt{2}}$ $|010110111\rangle$+ $\frac{\alpha}{8\sqrt{2}}$ $|100001000\rangle$- $\frac{\alpha}{8\sqrt{2}}$ $|101101001\rangle$+ $\frac{\alpha}{8\sqrt{2}}$ $|110011010\rangle$- $\frac{\alpha}{8\sqrt{2}}$
$|111111011\rangle$- $\frac{\alpha}{8\sqrt{2}}$ $|100001100\rangle$+ $\frac{\alpha}{8\sqrt{2}}$ $|101101101\rangle$- $\frac{\alpha}{8\sqrt{2}}$ $|110011110\rangle$+ $\frac{\alpha}{8\sqrt{2}}$ $|111111111\rangle$- $\frac{\alpha}{8\sqrt{2}}$ $|011010000\rangle$- $\frac{\alpha}{8\sqrt{2}}$
$|010110001\rangle$+ $\frac{\alpha}{8\sqrt{2}}$ $|001000010\rangle$+ $\frac{\alpha}{8\sqrt{2}}$ $|000100011\rangle$+ $\frac{\alpha}{8\sqrt{2}}$ $|011010100\rangle$+ $\frac{\alpha}{8\sqrt{2}}$ $|010110101\rangle$- $\frac{\alpha}{8\sqrt{2}}$ $|001000110\rangle$- $\frac{\alpha}{8\sqrt{2}}$
$|000100111\rangle$+ $\frac{\alpha}{8\sqrt{2}}$ $|110011000\rangle$- $\frac{\alpha}{8\sqrt{2}}$ $|111111001\rangle$+ $\frac{\alpha}{8\sqrt{2}}$ $|100001010\rangle$- $\frac{\alpha}{8\sqrt{2}}$ $|101101011\rangle$- $\frac{\alpha}{8\sqrt{2}}$ $|110011100\rangle$+ $\frac{\alpha}{8\sqrt{2}}$
$|111111101\rangle$- $\frac{\alpha}{8\sqrt{2}}$ $|100001110\rangle$+ $\frac{\alpha}{8\sqrt{2}}$ $|101101111\rangle$+ $\frac{\beta}{8\sqrt{2}}$ $|010000000\rangle$+ $\frac{\beta}{8\sqrt{2}}$ $|011100001\rangle$+ $\frac{\beta}{8\sqrt{2}}$ $|000010010\rangle$+ $\frac{\beta}{8\sqrt{2}}$

$|001110011\rangle$- $\frac{\beta}{8\sqrt{2}}$ $|010000100\rangle$- $\frac{\beta}{8\sqrt{2}}$ $|011100101\rangle$- $\frac{\beta}{8\sqrt{2}}$ $|000010110\rangle$- $\frac{\beta}{8\sqrt{2}}$ $|001110111\rangle$- $\frac{\beta}{8\sqrt{2}}$ $|111001000\rangle$+ $\frac{\beta}{8\sqrt{2}}$
$|110101001\rangle$+ $\frac{\beta}{8\sqrt{2}}$ $|101011010\rangle$- $\frac{\beta}{8\sqrt{2}}$ $|100111011\rangle$+ $\frac{\beta}{8\sqrt{2}}$ $|111001100\rangle$- $\frac{\beta}{8\sqrt{2}}$ $|110101101\rangle$- $\frac{\beta}{8\sqrt{2}}$ $|101011110\rangle$+ $\frac{\beta}{8\sqrt{2}}$
$|100111111\rangle$+ $\frac{\beta}{8\sqrt{2}}$ $|000010000\rangle$+ $\frac{\beta}{8\sqrt{2}}$ $|001110001\rangle$+ $\frac{\beta}{8\sqrt{2}}$ $|010000010\rangle$+ $\frac{\beta}{8\sqrt{2}}$ $|011100011\rangle$- $\frac{\beta}{8\sqrt{2}}$ $|000010100\rangle$- $\frac{\beta}{8\sqrt{2}}$
$|001110101\rangle$- $\frac{\beta}{8\sqrt{2}}$ $|010000110\rangle$- $\frac{\beta}{8\sqrt{2}}$ $|011100111\rangle$+ $\frac{\beta}{8\sqrt{2}}$ $|101011000\rangle$- $\frac{\beta}{8\sqrt{2}}$ $|100111001\rangle$- $\frac{\beta}{8\sqrt{2}}$ $|111001010\rangle$+ $\frac{\beta}{8\sqrt{2}}$
$|110101011\rangle$- $\frac{\beta}{8\sqrt{2}}$ $|101011100\rangle$+ $\frac{\beta}{8\sqrt{2}}$ $|100111101\rangle$+ $\frac{\beta}{8\sqrt{2}}$ $|111001110\rangle$- $\frac{\beta}{8\sqrt{2}}$ $|110101111\rangle$+ $\frac{\beta}{8\sqrt{2}}$ $|100100000\rangle$- $\frac{\beta}{8\sqrt{2}}$
$|101000001\rangle$- $\frac{\beta}{8\sqrt{2}}$ $|110110010\rangle$+ $\frac{\beta}{8\sqrt{2}}$ $|111010011\rangle$- $\frac{\beta}{8\sqrt{2}}$ $|100100100\rangle$+ $\frac{\beta}{8\sqrt{2}}$ $|101000101\rangle$+ $\frac{\beta}{8\sqrt{2}}$ $|110110110\rangle$- $\frac{\beta}{8\sqrt{2}}$
$|111010111\rangle$- $\frac{\beta}{8\sqrt{2}}$ $|001101000\rangle$- $\frac{\beta}{8\sqrt{2}}$ $|000001001\rangle$- $\frac{\beta}{8\sqrt{2}}$ $|011111010\rangle$- $\frac{\beta}{8\sqrt{2}}$ $|010011011\rangle$+ $\frac{\beta}{8\sqrt{2}}$ $|001101100\rangle$+ $\frac{\beta}{8\sqrt{2}}$
$|000001101\rangle$+ $\frac{\beta}{8\sqrt{2}}$ $|011111110\rangle$+ $\frac{\beta}{8\sqrt{2}}$ $|010011111\rangle$- $\frac{\beta}{8\sqrt{2}}$ $|110110000\rangle$+ $\frac{\beta}{8\sqrt{2}}$ $|111010001\rangle$+ $\frac{\beta}{8\sqrt{2}}$ $|100100010\rangle$- $\frac{\beta}{8\sqrt{2}}$
$|101000011\rangle$+ $\frac{\beta}{8\sqrt{2}}$ $|110110100\rangle$- $\frac{\beta}{8\sqrt{2}}$ $|111010101\rangle$- $\frac{\beta}{8\sqrt{2}}$ $|100100110\rangle$+ $\frac{\beta}{8\sqrt{2}}$ $|101000111\rangle$- $\frac{\beta}{8\sqrt{2}}$ $|011111000\rangle$- $\frac{\beta}{8\sqrt{2}}$
$|010011001\rangle$- $\frac{\beta}{8\sqrt{2}}$ $|001101010\rangle$- $\frac{\beta}{8\sqrt{2}}$ $|000001011\rangle$+ $\frac{\beta}{8\sqrt{2}}$ $|011111100\rangle$+ $\frac{\beta}{8\sqrt{2}}$ $|010011101\rangle$+ $\frac{\beta}{8\sqrt{2}}$ $|001101110\rangle$+ $\frac{\beta}{8\sqrt{2}}$
$|000001111\rangle$- $\frac{\beta}{8\sqrt{2}}$ $|001100000\rangle$- $\frac{\beta}{8\sqrt{2}}$ $|000000001\rangle$- $\frac{\beta}{8\sqrt{2}}$ $|011110010\rangle$- $\frac{\beta}{8\sqrt{2}}$ $|010010011\rangle$+ $\frac{\beta}{8\sqrt{2}}$ $|001100100\rangle$+ $\frac{\beta}{8\sqrt{2}}$
$|000000101\rangle$+ $\frac{\beta}{8\sqrt{2}}$ $|011110110\rangle$+ $\frac{\beta}{8\sqrt{2}}$ $|010010111\rangle$+ $\frac{\beta}{8\sqrt{2}}$ $|100101000\rangle$- $\frac{\beta}{8\sqrt{2}}$ $|101001001\rangle$- $\frac{\beta}{8\sqrt{2}}$ $|110111010\rangle$+ $\frac{\beta}{8\sqrt{2}}$
$|111011011\rangle$- $\frac{\beta}{8\sqrt{2}}$ $|100101100\rangle$+ $\frac{\beta}{8\sqrt{2}}$ $|101001101\rangle$+ $\frac{\beta}{8\sqrt{2}}$ $|110111110\rangle$- $\frac{\beta}{8\sqrt{2}}$ $|111011111\rangle$- $\frac{\beta}{8\sqrt{2}}$ $|011110000\rangle$- $\frac{\beta}{8\sqrt{2}}$
$|010010001\rangle$- $\frac{\beta}{8\sqrt{2}}$ $|001100010\rangle$- $\frac{\beta}{8\sqrt{2}}$ $|000000011\rangle$+ $\frac{\beta}{8\sqrt{2}}$ $|011110100\rangle$+ $\frac{\beta}{8\sqrt{2}}$ $|010010101\rangle$+ $\frac{\beta}{8\sqrt{2}}$ $|001100110\rangle$+ $\frac{\beta}{8\sqrt{2}}$
$|000000111\rangle$- $\frac{\beta}{8\sqrt{2}}$ $|110111000\rangle$+ $\frac{\beta}{8\sqrt{2}}$ $|111011001\rangle$+ $\frac{\beta}{8\sqrt{2}}$ $|100101010\rangle$- $\frac{\beta}{8\sqrt{2}}$ $|101001011\rangle$+ $\frac{\beta}{8\sqrt{2}}$ $|110111100\rangle$- $\frac{\beta}{8\sqrt{2}}$
$|111011101\rangle$- $\frac{\beta}{8\sqrt{2}}$ $|100101110\rangle$+ $\frac{\beta}{8\sqrt{2}}$ $|101001111\rangle$- $\frac{\beta}{8\sqrt{2}}$ $|111000000\rangle$+ $\frac{\beta}{8\sqrt{2}}$ $|110100001\rangle$+ $\frac{\beta}{8\sqrt{2}}$ $|101010010\rangle$- $\frac{\beta}{8\sqrt{2}}$
$|100110011\rangle$+ $\frac{\beta}{8\sqrt{2}}$ $|111000100\rangle$- $\frac{\beta}{8\sqrt{2}}$ $|110100101\rangle$- $\frac{\beta}{8\sqrt{2}}$ $|101010110\rangle$+ $\frac{\beta}{8\sqrt{2}}$ $|100110111\rangle$+ $\frac{\beta}{8\sqrt{2}}$ $|010001000\rangle$+ $\frac{\beta}{8\sqrt{2}}$
$|011101001\rangle$+ $\frac{\beta}{8\sqrt{2}}$ $|000011010\rangle$+ $\frac{\beta}{8\sqrt{2}}$ $|001111011\rangle$- $\frac{\beta}{8\sqrt{2}}$ $|010001100\rangle$- $\frac{\beta}{8\sqrt{2}}$ $|011101101\rangle$- $\frac{\beta}{8\sqrt{2}}$ $|000011110\rangle$- $\frac{\beta}{8\sqrt{2}}$
$|001111111\rangle$+ $\frac{\beta}{8\sqrt{2}}$ $|101010000\rangle$- $\frac{\beta}{8\sqrt{2}}$ $|100110001\rangle$- $\frac{\beta}{8\sqrt{2}}$ $|111000010\rangle$+ $\frac{\beta}{8\sqrt{2}}$ $|110100011\rangle$- $\frac{\beta}{8\sqrt{2}}$ $|101010100\rangle$+ $\frac{\beta}{8\sqrt{2}}$
$|100110101\rangle$+ $\frac{\beta}{8\sqrt{2}}$ $|111000110\rangle$- $\frac{\beta}{8\sqrt{2}}$ $|110100111\rangle$+ $\frac{\beta}{8\sqrt{2}}$ $|000011000\rangle$+ $\frac{\beta}{8\sqrt{2}}$ $|001111001\rangle$+ $\frac{\beta}{8\sqrt{2}}$ $|010001010\rangle$+ $\frac{\beta}{8\sqrt{2}}$
$|011101011\rangle$-$\frac{\beta}{8\sqrt{2}}$ $|000011100\rangle$-$\frac{\beta}{8\sqrt{2}}$ $|001111101\rangle$-$\frac{\beta}{8\sqrt{2}}$ $|010001110\rangle$-$\frac{\beta}{8\sqrt{2}}$ $|011101111\rangle$.

- Porte X(5) :

$|\psi_3\rangle$ = $\frac{\alpha}{8\sqrt{2}}$ $|100000000\rangle$- $\frac{\alpha}{8\sqrt{2}}$ $|101110001\rangle$+ $\frac{\alpha}{8\sqrt{2}}$ $|110010010\rangle$- $\frac{\alpha}{8\sqrt{2}}$ $|111100011\rangle$- $\frac{\alpha}{8\sqrt{2}}$ $|100000100\rangle$+ $\frac{\alpha}{8\sqrt{2}}$
$|101110101\rangle$- $\frac{\alpha}{8\sqrt{2}}$ $|110010110\rangle$+ $\frac{\alpha}{8\sqrt{2}}$ $|111100111\rangle$+ $\frac{\alpha}{8\sqrt{2}}$ $|001001000\rangle$+ $\frac{\alpha}{8\sqrt{2}}$ $|000111001\rangle$- $\frac{\alpha}{8\sqrt{2}}$ $|011011010\rangle$- $\frac{\alpha}{8\sqrt{2}}$
$|010101011\rangle$- $\frac{\alpha}{8\sqrt{2}}$ $|001001100\rangle$- $\frac{\alpha}{8\sqrt{2}}$ $|000111101\rangle$+ $\frac{\alpha}{8\sqrt{2}}$ $|011011110\rangle$+ $\frac{\alpha}{8\sqrt{2}}$ $|010101111\rangle$+ $\frac{\alpha}{8\sqrt{2}}$ $|110010000\rangle$- $\frac{\alpha}{8\sqrt{2}}$
$|111100001\rangle$+ $\frac{\alpha}{8\sqrt{2}}$ $|100000010\rangle$- $\frac{\alpha}{8\sqrt{2}}$ $|101110011\rangle$- $\frac{\alpha}{8\sqrt{2}}$ $|110010100\rangle$+ $\frac{\alpha}{8\sqrt{2}}$ $|111100101\rangle$- $\frac{\alpha}{8\sqrt{2}}$ $|100000110\rangle$+ $\frac{\alpha}{8\sqrt{2}}$
$|101110111\rangle$- $\frac{\alpha}{8\sqrt{2}}$ $|011011000\rangle$- $\frac{\alpha}{8\sqrt{2}}$ $|010101001\rangle$+ $\frac{\alpha}{8\sqrt{2}}$ $|001001010\rangle$+ $\frac{\alpha}{8\sqrt{2}}$ $|000111011\rangle$+ $\frac{\alpha}{8\sqrt{2}}$ $|011011100\rangle$+ $\frac{\alpha}{8\sqrt{2}}$
$|010101101\rangle$- $\frac{\alpha}{8\sqrt{2}}$ $|001001110\rangle$- $\frac{\alpha}{8\sqrt{2}}$ $|000111111\rangle$+ $\frac{\alpha}{8\sqrt{2}}$ $|010100000\rangle$+ $\frac{\alpha}{8\sqrt{2}}$ $|011010001\rangle$- $\frac{\alpha}{8\sqrt{2}}$ $|000110010\rangle$- $\frac{\alpha}{8\sqrt{2}}$
$|001000011\rangle$- $\frac{\alpha}{8\sqrt{2}}$ $|010100100\rangle$- $\frac{\alpha}{8\sqrt{2}}$ $|011010101\rangle$+ $\frac{\alpha}{8\sqrt{2}}$ $|000110110\rangle$+ $\frac{\alpha}{8\sqrt{2}}$ $|001000111\rangle$+ $\frac{\alpha}{8\sqrt{2}}$ $|111101000\rangle$- $\frac{\alpha}{8\sqrt{2}}$
$|110011001\rangle$+ $\frac{\alpha}{8\sqrt{2}}$ $|101111010\rangle$- $\frac{\alpha}{8\sqrt{2}}$ $|100001011\rangle$- $\frac{\alpha}{8\sqrt{2}}$ $|111101100\rangle$+ $\frac{\alpha}{8\sqrt{2}}$ $|110011101\rangle$- $\frac{\alpha}{8\sqrt{2}}$ $|101111110\rangle$+ $\frac{\alpha}{8\sqrt{2}}$
$|100001111\rangle$- $\frac{\alpha}{8\sqrt{2}}$ $|000110000\rangle$- $\frac{\alpha}{8\sqrt{2}}$ $|001000001\rangle$+ $\frac{\alpha}{8\sqrt{2}}$ $|010100010\rangle$+ $\frac{\alpha}{8\sqrt{2}}$ $|011010011\rangle$+ $\frac{\alpha}{8\sqrt{2}}$ $|000110100\rangle$+ $\frac{\alpha}{8\sqrt{2}}$
$|001000101\rangle$- $\frac{\alpha}{8\sqrt{2}}$ $|010100110\rangle$- $\frac{\alpha}{8\sqrt{2}}$ $|011010111\rangle$+ $\frac{\alpha}{8\sqrt{2}}$ $|101111000\rangle$- $\frac{\alpha}{8\sqrt{2}}$ $|100001001\rangle$+ $\frac{\alpha}{8\sqrt{2}}$ $|111101010\rangle$- $\frac{\alpha}{8\sqrt{2}}$
$|110011011\rangle$- $\frac{\alpha}{8\sqrt{2}}$ $|101111100\rangle$+ $\frac{\alpha}{8\sqrt{2}}$ $|100001101\rangle$- $\frac{\alpha}{8\sqrt{2}}$ $|111101110\rangle$+ $\frac{\alpha}{8\sqrt{2}}$ $|110011111\rangle$+ $\frac{\alpha}{8\sqrt{2}}$ $|111100000\rangle$- $\frac{\alpha}{8\sqrt{2}}$
$|110010001\rangle$+ $\frac{\alpha}{8\sqrt{2}}$ $|101110010\rangle$- $\frac{\alpha}{8\sqrt{2}}$ $|100000011\rangle$- $\frac{\alpha}{8\sqrt{2}}$ $|111100100\rangle$+ $\frac{\alpha}{8\sqrt{2}}$ $|110010101\rangle$- $\frac{\alpha}{8\sqrt{2}}$ $|101110110\rangle$+ $\frac{\alpha}{8\sqrt{2}}$
$|100000111\rangle$+ $\frac{\alpha}{8\sqrt{2}}$ $|010101000\rangle$+ $\frac{\alpha}{8\sqrt{2}}$ $|011011001\rangle$- $\frac{\alpha}{8\sqrt{2}}$ $|000111010\rangle$- $\frac{\alpha}{8\sqrt{2}}$ $|001001011\rangle$- $\frac{\alpha}{8\sqrt{2}}$ $|010101100\rangle$- $\frac{\alpha}{8\sqrt{2}}$
$|011011101\rangle$+ $\frac{\alpha}{8\sqrt{2}}$ $|000111110\rangle$+ $\frac{\alpha}{8\sqrt{2}}$ $|001001111\rangle$+ $\frac{\alpha}{8\sqrt{2}}$ $|101110000\rangle$- $\frac{\alpha}{8\sqrt{2}}$ $|100000001\rangle$+ $\frac{\alpha}{8\sqrt{2}}$ $|111100010\rangle$- $\frac{\alpha}{8\sqrt{2}}$
$|110010011\rangle$- $\frac{\alpha}{8\sqrt{2}}$ $|101110100\rangle$+ $\frac{\alpha}{8\sqrt{2}}$ $|100000101\rangle$- $\frac{\alpha}{8\sqrt{2}}$ $|111100110\rangle$+ $\frac{\alpha}{8\sqrt{2}}$ $|110010111\rangle$- $\frac{\alpha}{8\sqrt{2}}$ $|000111000\rangle$- $\frac{\alpha}{8\sqrt{2}}$
$|001001001\rangle$+ $\frac{\alpha}{8\sqrt{2}}$ $|010101010\rangle$+ $\frac{\alpha}{8\sqrt{2}}$ $|011011011\rangle$+ $\frac{\alpha}{8\sqrt{2}}$ $|000111100\rangle$+ $\frac{\alpha}{8\sqrt{2}}$ $|001001101\rangle$- $\frac{\alpha}{8\sqrt{2}}$ $|010101110\rangle$- $\frac{\alpha}{8\sqrt{2}}$

$|011011111\rangle+\frac{\alpha}{8\sqrt{2}}|001000000\rangle+\frac{\alpha}{8\sqrt{2}}|000110001\rangle-\frac{\alpha}{8\sqrt{2}}|011010010\rangle-\frac{\alpha}{8\sqrt{2}}|010100011\rangle-\frac{\alpha}{8\sqrt{2}}|001000100\rangle-\frac{\alpha}{8\sqrt{2}}$
$|000110101\rangle+\frac{\alpha}{8\sqrt{2}}|011010110\rangle+\frac{\alpha}{8\sqrt{2}}|010100111\rangle+\frac{\alpha}{8\sqrt{2}}|100001000\rangle-\frac{\alpha}{8\sqrt{2}}|101111001\rangle+\frac{\alpha}{8\sqrt{2}}|110011010\rangle-\frac{\alpha}{8\sqrt{2}}$
$|111101011\rangle-\frac{\alpha}{8\sqrt{2}}|100001100\rangle+\frac{\alpha}{8\sqrt{2}}|101111101\rangle-\frac{\alpha}{8\sqrt{2}}|110011110\rangle+\frac{\alpha}{8\sqrt{2}}|111101111\rangle-\frac{\alpha}{8\sqrt{2}}|011010000\rangle-\frac{\alpha}{8\sqrt{2}}$
$|010100001\rangle+\frac{\alpha}{8\sqrt{2}}|001000010\rangle+\frac{\alpha}{8\sqrt{2}}|000110011\rangle+\frac{\alpha}{8\sqrt{2}}|011010100\rangle+\frac{\alpha}{8\sqrt{2}}|010100101\rangle-\frac{\alpha}{8\sqrt{2}}|001000110\rangle-\frac{\alpha}{8\sqrt{2}}$
$|000110111\rangle+\frac{\alpha}{8\sqrt{2}}|110011000\rangle-\frac{\alpha}{8\sqrt{2}}|111101001\rangle+\frac{\alpha}{8\sqrt{2}}|100001010\rangle-\frac{\alpha}{8\sqrt{2}}|101111011\rangle-\frac{\alpha}{8\sqrt{2}}|110011100\rangle+\frac{\alpha}{8\sqrt{2}}$
$|111101101\rangle-\frac{\alpha}{8\sqrt{2}}|100001110\rangle+\frac{\alpha}{8\sqrt{2}}|101111111\rangle+\frac{\beta}{8\sqrt{2}}|010000000\rangle+\frac{\beta}{8\sqrt{2}}|011110001\rangle+\frac{\beta}{8\sqrt{2}}|000010010\rangle+\frac{\beta}{8\sqrt{2}}$
$|001100011\rangle-\frac{\beta}{8\sqrt{2}}|010000100\rangle-\frac{\beta}{8\sqrt{2}}|011110101\rangle-\frac{\beta}{8\sqrt{2}}|000010110\rangle-\frac{\beta}{8\sqrt{2}}|001100111\rangle-\frac{\beta}{8\sqrt{2}}|111001000\rangle+\frac{\beta}{8\sqrt{2}}$
$|110111001\rangle+\frac{\beta}{8\sqrt{2}}|101011010\rangle-\frac{\beta}{8\sqrt{2}}|100101011\rangle+\frac{\beta}{8\sqrt{2}}|111001100\rangle-\frac{\beta}{8\sqrt{2}}|110111101\rangle-\frac{\beta}{8\sqrt{2}}|101011110\rangle+\frac{\beta}{8\sqrt{2}}$
$|100101111\rangle+\frac{\beta}{8\sqrt{2}}|000010000\rangle+\frac{\beta}{8\sqrt{2}}|001100001\rangle+\frac{\beta}{8\sqrt{2}}|010000010\rangle+\frac{\beta}{8\sqrt{2}}|011110011\rangle-\frac{\beta}{8\sqrt{2}}|000010100\rangle-\frac{\beta}{8\sqrt{2}}$
$|001100101\rangle-\frac{\beta}{8\sqrt{2}}|010000110\rangle-\frac{\beta}{8\sqrt{2}}|011110111\rangle+\frac{\beta}{8\sqrt{2}}|101011000\rangle-\frac{\beta}{8\sqrt{2}}|100101001\rangle-\frac{\beta}{8\sqrt{2}}|111001010\rangle+\frac{\beta}{8\sqrt{2}}$
$|110111011\rangle-\frac{\beta}{8\sqrt{2}}|101011100\rangle+\frac{\beta}{8\sqrt{2}}|100101101\rangle+\frac{\beta}{8\sqrt{2}}|111001110\rangle-\frac{\beta}{8\sqrt{2}}|110111111\rangle+\frac{\beta}{8\sqrt{2}}|100100000\rangle-\frac{\beta}{8\sqrt{2}}$
$|101010001\rangle-\frac{\beta}{8\sqrt{2}}|110110010\rangle+\frac{\beta}{8\sqrt{2}}|111000011\rangle-\frac{\beta}{8\sqrt{2}}|100100100\rangle+\frac{\beta}{8\sqrt{2}}|101010101\rangle+\frac{\beta}{8\sqrt{2}}|110110110\rangle-\frac{\beta}{8\sqrt{2}}$
$|111000111\rangle-\frac{\beta}{8\sqrt{2}}|001101000\rangle-\frac{\beta}{8\sqrt{2}}|000011001\rangle-\frac{\beta}{8\sqrt{2}}|011111010\rangle-\frac{\beta}{8\sqrt{2}}|010001011\rangle+\frac{\beta}{8\sqrt{2}}|001101100\rangle+\frac{\beta}{8\sqrt{2}}$
$|000011101\rangle+\frac{\beta}{8\sqrt{2}}|011111110\rangle+\frac{\beta}{8\sqrt{2}}|010001111\rangle-\frac{\beta}{8\sqrt{2}}|110110000\rangle+\frac{\beta}{8\sqrt{2}}|111000001\rangle+\frac{\beta}{8\sqrt{2}}|100100010\rangle-\frac{\beta}{8\sqrt{2}}$
$|101010011\rangle+\frac{\beta}{8\sqrt{2}}|110110100\rangle-\frac{\beta}{8\sqrt{2}}|111000101\rangle-\frac{\beta}{8\sqrt{2}}|100100110\rangle+\frac{\beta}{8\sqrt{2}}|101010111\rangle-\frac{\beta}{8\sqrt{2}}|011111000\rangle-\frac{\beta}{8\sqrt{2}}$
$|010001001\rangle-\frac{\beta}{8\sqrt{2}}|001101010\rangle-\frac{\beta}{8\sqrt{2}}|000011011\rangle+\frac{\beta}{8\sqrt{2}}|011111100\rangle+\frac{\beta}{8\sqrt{2}}|010001101\rangle+\frac{\beta}{8\sqrt{2}}|001101110\rangle+\frac{\beta}{8\sqrt{2}}$
$|000011111\rangle-\frac{\beta}{8\sqrt{2}}|001100000\rangle-\frac{\beta}{8\sqrt{2}}|000010001\rangle-\frac{\beta}{8\sqrt{2}}|011110010\rangle-\frac{\beta}{8\sqrt{2}}|010000011\rangle+\frac{\beta}{8\sqrt{2}}|001100100\rangle+\frac{\beta}{8\sqrt{2}}$
$|000010101\rangle+\frac{\beta}{8\sqrt{2}}|011110110\rangle+\frac{\beta}{8\sqrt{2}}|010000111\rangle+\frac{\beta}{8\sqrt{2}}|100101000\rangle-\frac{\beta}{8\sqrt{2}}|101011001\rangle-\frac{\beta}{8\sqrt{2}}|110111010\rangle+\frac{\beta}{8\sqrt{2}}$
$|111001011\rangle-\frac{\beta}{8\sqrt{2}}|100101100\rangle+\frac{\beta}{8\sqrt{2}}|101011101\rangle+\frac{\beta}{8\sqrt{2}}|110111110\rangle-\frac{\beta}{8\sqrt{2}}|111001111\rangle-\frac{\beta}{8\sqrt{2}}|011110000\rangle-\frac{\beta}{8\sqrt{2}}$
$|010000001\rangle-\frac{\beta}{8\sqrt{2}}|001100010\rangle-\frac{\beta}{8\sqrt{2}}|000010011\rangle+\frac{\beta}{8\sqrt{2}}|011110100\rangle+\frac{\beta}{8\sqrt{2}}|010000101\rangle+\frac{\beta}{8\sqrt{2}}|001100110\rangle+\frac{\beta}{8\sqrt{2}}$
$|000010111\rangle-\frac{\beta}{8\sqrt{2}}|110111000\rangle+\frac{\beta}{8\sqrt{2}}|111001001\rangle+\frac{\beta}{8\sqrt{2}}|100101010\rangle-\frac{\beta}{8\sqrt{2}}|101011011\rangle+\frac{\beta}{8\sqrt{2}}|110111100\rangle-\frac{\beta}{8\sqrt{2}}$
$|111001101\rangle-\frac{\beta}{8\sqrt{2}}|100101110\rangle+\frac{\beta}{8\sqrt{2}}|101011111\rangle-\frac{\beta}{8\sqrt{2}}|111000000\rangle+\frac{\beta}{8\sqrt{2}}|110110001\rangle+\frac{\beta}{8\sqrt{2}}|101010010\rangle-\frac{\beta}{8\sqrt{2}}$
$|100100011\rangle+\frac{\beta}{8\sqrt{2}}|111000100\rangle-\frac{\beta}{8\sqrt{2}}|110110101\rangle-\frac{\beta}{8\sqrt{2}}|101010110\rangle+\frac{\beta}{8\sqrt{2}}|100100111\rangle+\frac{\beta}{8\sqrt{2}}|010001000\rangle+\frac{\beta}{8\sqrt{2}}$
$|011111001\rangle+\frac{\beta}{8\sqrt{2}}|000011010\rangle+\frac{\beta}{8\sqrt{2}}|001101011\rangle-\frac{\beta}{8\sqrt{2}}|010001100\rangle-\frac{\beta}{8\sqrt{2}}|011111101\rangle-\frac{\beta}{8\sqrt{2}}|000011110\rangle-\frac{\beta}{8\sqrt{2}}$
$|001101111\rangle+\frac{\beta}{8\sqrt{2}}|101010000\rangle-\frac{\beta}{8\sqrt{2}}|100100001\rangle-\frac{\beta}{8\sqrt{2}}|111000010\rangle+\frac{\beta}{8\sqrt{2}}|110110011\rangle-\frac{\beta}{8\sqrt{2}}|101010100\rangle+\frac{\beta}{8\sqrt{2}}$
$|100100101\rangle+\frac{\beta}{8\sqrt{2}}|111000110\rangle-\frac{\beta}{8\sqrt{2}}|110110111\rangle+\frac{\beta}{8\sqrt{2}}|000011000\rangle+\frac{\beta}{8\sqrt{2}}|001101001\rangle+\frac{\beta}{8\sqrt{2}}|010001010\rangle+\frac{\beta}{8\sqrt{2}}$
$|011111011\rangle-\frac{\beta}{8\sqrt{2}}|000011100\rangle-\frac{\beta}{8\sqrt{2}}|001101101\rangle-\frac{\beta}{8\sqrt{2}}|010001110\rangle-\frac{\beta}{8\sqrt{2}}|011111111\rangle.$

- Porte H(6) :

$|\psi_3\rangle=\frac{\alpha}{16}|100000000\rangle+\frac{\alpha}{16}|100001000\rangle-\frac{\alpha}{16}|101110001\rangle-\frac{\alpha}{16}|101111001\rangle+\frac{\alpha}{16}|110010010\rangle+\frac{\alpha}{16}|110011010\rangle$
$-\frac{\alpha}{16}|111100011\rangle-\frac{\alpha}{16}|111101011\rangle-\frac{\alpha}{16}|100000100\rangle-\frac{\alpha}{16}|100001100\rangle+\frac{\alpha}{16}|101110101\rangle+\frac{\alpha}{16}|101111101\rangle$
$-\frac{\alpha}{16}|110010110\rangle-\frac{\alpha}{16}|110011110\rangle+\frac{\alpha}{16}|111100111\rangle+\frac{\alpha}{16}|111101111\rangle+\frac{\alpha}{16}|001000000\rangle-\frac{\alpha}{16}|001001000\rangle$
$+\frac{\alpha}{16}|000110001\rangle-\frac{\alpha}{16}|000111001\rangle+\frac{\alpha}{16}|011010010\rangle+\frac{\alpha}{16}|011011010\rangle-\frac{\alpha}{16}|010100011\rangle+\frac{\alpha}{16}|010101011\rangle$
$-\frac{\alpha}{16}|001000100\rangle+\frac{\alpha}{16}|001001100\rangle-\frac{\alpha}{16}|000110101\rangle+\frac{\alpha}{16}|000111101\rangle+\frac{\alpha}{16}|011010110\rangle-\frac{\alpha}{16}|011011110\rangle$
$+\frac{\alpha}{16}|010100111\rangle-\frac{\alpha}{16}|010101111\rangle+\frac{\alpha}{16}|110010000\rangle+\frac{\alpha}{16}|110011000\rangle-\frac{\alpha}{16}|111100001\rangle-\frac{\alpha}{16}|111101001\rangle$
$+\frac{\alpha}{16}|100000010\rangle+\frac{\alpha}{16}|100001010\rangle-\frac{\alpha}{16}|101110011\rangle-\frac{\alpha}{16}|101111011\rangle-\frac{\alpha}{16}|110010100\rangle-\frac{\alpha}{16}|110011100\rangle$
$+\frac{\alpha}{16}|111100101\rangle+\frac{\alpha}{16}|111101101\rangle-\frac{\alpha}{16}|100000110\rangle-\frac{\alpha}{16}|100001110\rangle+\frac{\alpha}{16}|101110111\rangle+\frac{\alpha}{16}|101111111\rangle$

$$-\frac{\alpha}{16}|011010000\rangle+\frac{\alpha}{16}|011011000\rangle-\frac{\alpha}{16}|010100001\rangle+\frac{\alpha}{16}|010101001\rangle+\frac{\alpha}{16}|001000010\rangle-\frac{\alpha}{16}|001001010\rangle$$
$$+\frac{\alpha}{16}|000110011\rangle-\frac{\alpha}{16}|000111011\rangle+\frac{\alpha}{16}|011010100\rangle-\frac{\alpha}{16}|011011100\rangle+\frac{\alpha}{16}|010100101\rangle-\frac{\alpha}{16}|010101101\rangle$$
$$-\frac{\alpha}{16}|001000110\rangle+\frac{\alpha}{16}|001001110\rangle-\frac{\alpha}{16}|000110111\rangle+\frac{\alpha}{16}|000111111\rangle+\frac{\alpha}{16}|010100000\rangle+\frac{\alpha}{16}|010101000\rangle$$
$$+\frac{\alpha}{16}|011010001\rangle+\frac{\alpha}{16}|011011001\rangle-\frac{\alpha}{16}|000110010\rangle-\frac{\alpha}{16}|000111010\rangle-\frac{\alpha}{16}|001000011\rangle-\frac{\alpha}{16}|001001011\rangle$$
$$-\frac{\alpha}{16}|010100100\rangle-\frac{\alpha}{16}|010101100\rangle-\frac{\alpha}{16}|011010101\rangle-\frac{\alpha}{16}|011011101\rangle+\frac{\alpha}{16}|000110110\rangle+\frac{\alpha}{16}|000111110\rangle$$
$$+\frac{\alpha}{16}|001000111\rangle+\frac{\alpha}{16}|001001111\rangle+\frac{\alpha}{16}|111100000\rangle-\frac{\alpha}{16}|111101000\rangle-\frac{\alpha}{16}|110010001\rangle+\frac{\alpha}{16}|110011001\rangle$$
$$+\frac{\alpha}{16}|101110010\rangle-\frac{\alpha}{16}|101111010\rangle-\frac{\alpha}{16}|100000011\rangle+\frac{\alpha}{16}|100001011\rangle-\frac{\alpha}{16}|111100100\rangle+\frac{\alpha}{16}|111101100\rangle$$
$$+\frac{\alpha}{16}|110010101\rangle+\frac{\alpha}{16}|110011101\rangle-\frac{\alpha}{16}|101110110\rangle+\frac{\alpha}{16}|101111110\rangle+\frac{\alpha}{16}|100000111\rangle+\frac{\alpha}{16}|100001111\rangle$$
$$-\frac{\alpha}{16}|000110000\rangle-\frac{\alpha}{16}|000111000\rangle-\frac{\alpha}{16}|001000001\rangle-\frac{\alpha}{16}|001001001\rangle+\frac{\alpha}{16}|010100010\rangle+\frac{\alpha}{16}|010101010\rangle$$
$$+\frac{\alpha}{16}|011010011\rangle+\frac{\alpha}{16}|011011011\rangle+\frac{\alpha}{16}|000110100\rangle+\frac{\alpha}{16}|000111100\rangle+\frac{\alpha}{16}|001000101\rangle+\frac{\alpha}{16}|001001101\rangle$$
$$-\frac{\alpha}{16}|010100110\rangle-\frac{\alpha}{16}|010101110\rangle-\frac{\alpha}{16}|011010111\rangle-\frac{\alpha}{16}|011011111\rangle+\frac{\alpha}{16}|101110000\rangle-\frac{\alpha}{16}|101111000\rangle$$
$$-\frac{\alpha}{16}|100000001\rangle+\frac{\alpha}{16}|100001001\rangle+\frac{\alpha}{16}|111100010\rangle-\frac{\alpha}{16}|111101010\rangle-\frac{\alpha}{16}|110010011\rangle+\frac{\alpha}{16}|110011011\rangle$$
$$-\frac{\alpha}{16}|101110100\rangle+\frac{\alpha}{16}|101111100\rangle+\frac{\alpha}{16}|100000101\rangle-\frac{\alpha}{16}|100001101\rangle-\frac{\alpha}{16}|111100110\rangle+\frac{\alpha}{16}|111101110\rangle$$
$$+\frac{\alpha}{16}|110010111\rangle-\frac{\alpha}{16}|110011111\rangle+\frac{\alpha}{16}|111100000\rangle+\frac{\alpha}{16}|111101000\rangle-\frac{\alpha}{16}|110010001\rangle-\frac{\alpha}{16}|110011001\rangle$$
$$+\frac{\alpha}{16}|101110010\rangle+\frac{\alpha}{16}|101111010\rangle-\frac{\alpha}{16}|100000011\rangle-\frac{\alpha}{16}|100001011\rangle-\frac{\alpha}{16}|111100100\rangle-\frac{\alpha}{16}|111101100\rangle$$
$$+\frac{\alpha}{16}|110010101\rangle+\frac{\alpha}{16}|110011101\rangle-\frac{\alpha}{16}|101110110\rangle-\frac{\alpha}{16}|101111110\rangle+\frac{\alpha}{16}|100000111\rangle+\frac{\alpha}{16}|100001111\rangle$$
$$+\frac{\alpha}{16}|010100000\rangle-\frac{\alpha}{16}|010101000\rangle+\frac{\alpha}{16}|011010001\rangle-\frac{\alpha}{16}|011011001\rangle-\frac{\alpha}{16}|000110010\rangle+\frac{\alpha}{16}|000111010\rangle$$
$$-\frac{\alpha}{16}|001000011\rangle+\frac{\alpha}{16}|001001011\rangle-\frac{\alpha}{16}|010100100\rangle+\frac{\alpha}{16}|010101100\rangle-\frac{\alpha}{16}|011010101\rangle+\frac{\alpha}{16}|011011101\rangle$$
$$+\frac{\alpha}{16}|000110110\rangle-\frac{\alpha}{16}|000111110\rangle+\frac{\alpha}{16}|001000111\rangle-\frac{\alpha}{16}|001001111\rangle+\frac{\alpha}{16}|101110000\rangle+\frac{\alpha}{16}|101111000\rangle$$
$$-\frac{\alpha}{16}|100000001\rangle-\frac{\alpha}{16}|100001001\rangle+\frac{\alpha}{16}|111100010\rangle+\frac{\alpha}{16}|111101010\rangle-\frac{\alpha}{16}|110010011\rangle-\frac{\alpha}{16}|110011011\rangle$$
$$-\frac{\alpha}{16}|101110100\rangle-\frac{\alpha}{16}|101111100\rangle+\frac{\alpha}{16}|100000101\rangle+\frac{\alpha}{16}|100001101\rangle-\frac{\alpha}{16}|111100110\rangle-\frac{\alpha}{16}|111101110\rangle$$
$$+\frac{\alpha}{16}|110010111\rangle+\frac{\alpha}{16}|110011111\rangle-\frac{\alpha}{16}|000110000\rangle+\frac{\alpha}{16}|000111000\rangle-\frac{\alpha}{16}|001000001\rangle+\frac{\alpha}{16}|001001001\rangle$$
$$+\frac{\alpha}{16}|010100010\rangle-\frac{\alpha}{16}|010101010\rangle+\frac{\alpha}{16}|011010011\rangle-\frac{\alpha}{16}|011011011\rangle+\frac{\alpha}{16}|000110100\rangle-\frac{\alpha}{16}|011011011\rangle$$
$$+\frac{\alpha}{16}|001000101\rangle-\frac{\alpha}{16}|001001101\rangle-\frac{\alpha}{16}|010100110\rangle+\frac{\alpha}{16}|010101110\rangle-\frac{\alpha}{16}|011010111\rangle+\frac{\alpha}{16}|011011111\rangle$$
$$+\frac{\alpha}{16}|001000000\rangle+\frac{\alpha}{16}|001001000\rangle+\frac{\alpha}{16}|000110001\rangle+\frac{\alpha}{16}|000111001\rangle-\frac{\alpha}{16}|011010010\rangle-\frac{\alpha}{16}|011011010\rangle$$
$$-\frac{\alpha}{16}|010100011\rangle-\frac{\alpha}{16}|010101011\rangle-\frac{\alpha}{16}|001000100\rangle-\frac{\alpha}{16}|001001100\rangle-\frac{\alpha}{16}|000110101\rangle-\frac{\alpha}{16}|000111101\rangle$$
$$+\frac{\alpha}{16}|011010110\rangle+\frac{\alpha}{16}|011011110\rangle+\frac{\alpha}{16}|010100111\rangle+\frac{\alpha}{16}|010101111\rangle+\frac{\alpha}{16}|100000000\rangle-\frac{\alpha}{16}|100001000\rangle$$
$$-\frac{\alpha}{16}|101110001\rangle+\frac{\alpha}{16}|101111001\rangle+\frac{\alpha}{16}|110010010\rangle-\frac{\alpha}{16}|110011010\rangle-\frac{\alpha}{16}|111100011\rangle+\frac{\alpha}{16}|111101011\rangle$$
$$-\frac{\alpha}{16}|100000100\rangle+\frac{\alpha}{16}|100001100\rangle+\frac{\alpha}{16}|101110101\rangle-\frac{\alpha}{16}|101111101\rangle-\frac{\alpha}{16}|110010110\rangle+\frac{\alpha}{16}|110011110\rangle$$
$$+\frac{\alpha}{16}|111100111\rangle-\frac{\alpha}{16}|111101111\rangle-\frac{\alpha}{16}|011010000\rangle-\frac{\alpha}{16}|011011000\rangle-\frac{\alpha}{16}|010100001\rangle-\frac{\alpha}{16}|010101001\rangle$$
$$+\frac{\alpha}{16}|001000010\rangle+\frac{\alpha}{16}|001001010\rangle+\frac{\alpha}{16}|000110011\rangle+\frac{\alpha}{16}|000111011\rangle+\frac{\alpha}{16}|011010100\rangle+\frac{\alpha}{16}|011011100\rangle$$
$$+\frac{\alpha}{16}|010100101\rangle+\frac{\alpha}{16}|010101101\rangle-\frac{\alpha}{16}|001000110\rangle-\frac{\alpha}{16}|001001110\rangle-\frac{\alpha}{16}|000110111\rangle-\frac{\alpha}{16}|000111111\rangle$$
$$+\frac{\alpha}{16}|110010000\rangle-\frac{\alpha}{16}|110011000\rangle-\frac{\alpha}{16}|111100001\rangle+\frac{\alpha}{16}|111101001\rangle+\frac{\alpha}{16}|100000010\rangle-\frac{\alpha}{16}|100001010\rangle$$
$$-\frac{\alpha}{16}|101110011\rangle+\frac{\alpha}{16}|101111011\rangle-\frac{\alpha}{16}|110010100\rangle-\frac{\alpha}{16}|110011100\rangle+\frac{\alpha}{16}|111100101\rangle-\frac{\alpha}{16}|111101101\rangle$$
$$-\frac{\alpha}{16}|100000110\rangle+\frac{\alpha}{16}|100001110\rangle+\frac{\alpha}{16}|101110111\rangle-\frac{\alpha}{16}|101111111\rangle+\frac{\beta}{16}|010000000\rangle+\frac{\beta}{16}|010001000\rangle$$
$$+\frac{\beta}{16}|011110001\rangle+\frac{\beta}{16}|011111001\rangle+\frac{\beta}{16}|000010010\rangle+\frac{\beta}{16}|000011010\rangle+\frac{\beta}{16}|001100011\rangle+\frac{\beta}{16}|001101011\rangle$$
$$-\frac{\beta}{16}|010000100\rangle-\frac{\beta}{16}|010001100\rangle-\frac{\beta}{16}|011110101\rangle-\frac{\beta}{16}|011111101\rangle-\frac{\beta}{16}|000010110\rangle-\frac{\beta}{16}|000011110\rangle$$
$$-\frac{\beta}{16}|001100111\rangle-\frac{\beta}{16}|001101111\rangle-\frac{\beta}{16}|111000000\rangle+\frac{\beta}{16}|111001000\rangle+\frac{\beta}{16}|110110001\rangle-\frac{\beta}{16}|110111001\rangle$$
$$+\frac{\beta}{16}|101010010\rangle-\frac{\beta}{16}|101011010\rangle-\frac{\beta}{16}|100100011\rangle+\frac{\beta}{16}|100101011\rangle+\frac{\beta}{16}|111000100\rangle-\frac{\beta}{16}|111001100\rangle$$
$$-\frac{\beta}{16}|110110101\rangle+\frac{\beta}{16}|110111101\rangle-\frac{\beta}{16}|101010110\rangle+\frac{\beta}{16}|101011110\rangle+\frac{\beta}{16}|100100111\rangle-\frac{\beta}{16}|100101111\rangle$$
$$+\frac{\beta}{16}|000010000\rangle+\frac{\beta}{16}|000011000\rangle+\frac{\beta}{16}|001100001\rangle+\frac{\beta}{16}|001101001\rangle+\frac{\beta}{16}|010000010\rangle+\frac{\beta}{16}|010001010\rangle$$
$$+\frac{\beta}{16}|011110011\rangle+\frac{\beta}{16}|011111011\rangle-\frac{\beta}{16}|000010100\rangle-\frac{\beta}{16}|000011100\rangle-\frac{\beta}{16}|001100101\rangle-\frac{\beta}{16}|001101101\rangle$$
$$-\frac{\beta}{16}|010000110\rangle-\frac{\beta}{16}|010001110\rangle-\frac{\beta}{16}|011110111\rangle-\frac{\beta}{16}|011111111\rangle+\frac{\beta}{16}|101010000\rangle-\frac{\beta}{16}|101011000\rangle$$

$-\frac{\beta}{16}|100100001\rangle+\frac{\beta}{16}|100101001\rangle-\frac{\beta}{16}|111000010\rangle+\frac{\beta}{16}|111001010\rangle+\frac{\beta}{16}|110110011\rangle-\frac{\beta}{16}|110111011\rangle$
$-\frac{\beta}{16}|101010100\rangle+\frac{\beta}{16}|101011100\rangle+\frac{\beta}{16}|100100101\rangle-\frac{\beta}{16}|100101101\rangle+\frac{\beta}{16}|111000110\rangle-\frac{\beta}{16}|111001110\rangle$
$-\frac{\beta}{16}|110110111\rangle+\frac{\beta}{16}|110111111\rangle+\frac{\beta}{16}|100100000\rangle+\frac{\beta}{16}|100101000\rangle-\frac{\beta}{16}|101010001\rangle-\frac{\beta}{16}|101011001\rangle$
$-\frac{\beta}{16}|110110010\rangle-\frac{\beta}{16}|110111010\rangle+\frac{\beta}{16}|111000011\rangle+\frac{\beta}{16}|111001011\rangle-\frac{\beta}{16}|100100100\rangle-\frac{\beta}{16}|100101100\rangle$
$+\frac{\beta}{16}|101010101\rangle+\frac{\beta}{16}|101011101\rangle+\frac{\beta}{16}|110110110\rangle+\frac{\beta}{16}|110111110\rangle-\frac{\beta}{16}|111000111\rangle-\frac{\beta}{16}|111001111\rangle$
$-\frac{\beta}{16}|001100000\rangle+\frac{\beta}{16}|001101000\rangle-\frac{\beta}{16}|000010001\rangle+\frac{\beta}{16}|000011001\rangle-\frac{\beta}{16}|011110010\rangle+\frac{\beta}{16}|011111010\rangle$
$-\frac{\beta}{16}|010000011\rangle+\frac{\beta}{16}|010001011\rangle+\frac{\beta}{16}|001100100\rangle-\frac{\beta}{16}|001101100\rangle+\frac{\beta}{16}|000010101\rangle-\frac{\beta}{16}|000011101\rangle$
$+\frac{\beta}{16}|011110110\rangle-\frac{\beta}{16}|011111110\rangle+\frac{\beta}{16}|010000111\rangle-\frac{\beta}{16}|010001111\rangle-\frac{\beta}{16}|110110000\rangle-\frac{\beta}{16}|110111000\rangle$
$+\frac{\beta}{16}|111000001\rangle+\frac{\beta}{16}|111001001\rangle+\frac{\beta}{16}|100100010\rangle+\frac{\beta}{16}|100101010\rangle-\frac{\beta}{16}|101010011\rangle-\frac{\beta}{16}|101011011\rangle$
$+\frac{\beta}{16}|110110100\rangle+\frac{\beta}{16}|110111100\rangle-\frac{\beta}{16}|111000101\rangle-\frac{\beta}{16}|111001101\rangle-\frac{\beta}{16}|100100110\rangle-\frac{\beta}{16}|100101110\rangle$
$+\frac{\beta}{16}|101010111\rangle+\frac{\beta}{16}|101011111\rangle-\frac{\beta}{16}|011110000\rangle+\frac{\beta}{16}|011111000\rangle-\frac{\beta}{16}|010000001\rangle+\frac{\beta}{16}|010001001\rangle$
$-\frac{\beta}{16}|001100010\rangle+\frac{\beta}{16}|001101010\rangle-\frac{\beta}{16}|000010011\rangle+\frac{\beta}{16}|000011011\rangle+\frac{\beta}{16}|011119100\rangle-\frac{\beta}{16}|011111100\rangle$
$+\frac{\beta}{16}|010000101\rangle-\frac{\beta}{16}|010001101\rangle+\frac{\beta}{16}|001100110\rangle-\frac{\beta}{16}|010001101\rangle+\frac{\beta}{16}|000010111\rangle-\frac{\beta}{16}|000011111\rangle$
$-\frac{\beta}{16}|001100000\rangle-\frac{\beta}{16}|001101000\rangle-\frac{\beta}{16}|000010001\rangle-\frac{\beta}{16}|000011001\rangle-\frac{\beta}{16}|011110010\rangle-\frac{\beta}{16}|011111010\rangle$
$-\frac{\beta}{16}|010000011\rangle-\frac{\beta}{16}|010001011\rangle+\frac{\beta}{16}|001100100\rangle+\frac{\beta}{16}|001101100\rangle+\frac{\beta}{16}|000010101\rangle+\frac{\beta}{16}|000011101\rangle$
$+\frac{\beta}{16}|011110110\rangle+\frac{\beta}{16}|011111110\rangle+\frac{\beta}{16}|010000111\rangle+\frac{\beta}{16}|010001111\rangle+\frac{\beta}{16}|100100000\rangle-\frac{\beta}{16}|100101000\rangle$
$-\frac{\beta}{16}|101010001\rangle+\frac{\beta}{16}|101011001\rangle-\frac{\beta}{16}|110110010\rangle+\frac{\beta}{16}|110111010\rangle+\frac{\beta}{16}|111000011\rangle-\frac{\beta}{16}|111001011\rangle$
$-\frac{\beta}{16}|100100100\rangle+\frac{\beta}{16}|100101100\rangle+\frac{\beta}{16}|101010101\rangle-\frac{\beta}{16}|101011101\rangle+\frac{\beta}{16}|110110110\rangle-\frac{\beta}{16}|110111110\rangle$
$-\frac{\beta}{16}|111000111\rangle+\frac{\beta}{16}|111001111\rangle-\frac{\beta}{16}|011110000\rangle-\frac{\beta}{16}|011111000\rangle-\frac{\beta}{16}|010000001\rangle-\frac{\beta}{16}|010001001\rangle$
$-\frac{\beta}{16}|001100010\rangle-\frac{\beta}{16}|001101010\rangle-\frac{\beta}{16}|000010011\rangle+\frac{\beta}{16}|000011011\rangle+\frac{\beta}{16}|011110100\rangle+\frac{\beta}{16}|011111100\rangle$
$+\frac{\beta}{16}|010000101\rangle+\frac{\beta}{16}|010001101\rangle+\frac{\beta}{16}|001100110\rangle+\frac{\beta}{16}|001101110\rangle+\frac{\beta}{16}|000010111\rangle+\frac{\beta}{16}|000011111\rangle$
$-\frac{\beta}{16}|110110000\rangle+\frac{\beta}{16}|110111000\rangle+\frac{\beta}{16}|111000001\rangle-\frac{\beta}{16}|111001001\rangle+\frac{\beta}{16}|100100010\rangle-\frac{\beta}{16}|100101010\rangle$
$-\frac{\beta}{16}|101010011\rangle+\frac{\beta}{16}|101011011\rangle+\frac{\beta}{16}|110110100\rangle+\frac{\beta}{16}|110111100\rangle-\frac{\beta}{16}|111000101\rangle+\frac{\beta}{16}|111001101\rangle$
$-\frac{\beta}{16}|100100110\rangle+\frac{\beta}{16}|100101110\rangle+\frac{\beta}{16}|101010111\rangle-\frac{\beta}{16}|101011111\rangle-\frac{\beta}{16}|111000000\rangle-\frac{\beta}{16}|111001000\rangle$
$+\frac{\beta}{16}|110110001\rangle+\frac{\beta}{16}|110111001\rangle+\frac{\beta}{16}|101010010\rangle+\frac{\beta}{16}|101011010\rangle-\frac{\beta}{16}|100100011\rangle-\frac{\beta}{16}|100101011\rangle$
$+\frac{\beta}{16}|111000100\rangle+\frac{\beta}{16}|111001100\rangle-\frac{\beta}{16}|110110101\rangle-\frac{\beta}{16}|110111101\rangle-\frac{\beta}{16}|101010110\rangle-\frac{\beta}{16}|101011110\rangle$
$+\frac{\beta}{16}|100100111\rangle+\frac{\beta}{16}|100101111\rangle+\frac{\beta}{16}|010000000\rangle-\frac{\beta}{16}|010001000\rangle+\frac{\beta}{16}|011110001\rangle-\frac{\beta}{16}|011111001\rangle$
$+\frac{\beta}{16}|000010010\rangle-\frac{\beta}{16}|000011010\rangle+\frac{\beta}{16}|001100011\rangle-\frac{\beta}{16}|001101011\rangle-\frac{\beta}{16}|010000100\rangle+\frac{\beta}{16}|010001100\rangle$
$-\frac{\beta}{16}|011110101\rangle+\frac{\beta}{16}|011111101\rangle-\frac{\beta}{16}|000010110\rangle+\frac{\beta}{16}|000011110\rangle-\frac{\beta}{16}|001100111\rangle+\frac{\beta}{16}|001101111\rangle$
$+\frac{\beta}{16}|101010000\rangle+\frac{\beta}{16}|101011000\rangle-\frac{\beta}{16}|100100001\rangle-\frac{\beta}{16}|100101001\rangle-\frac{\beta}{16}|111000010\rangle-\frac{\beta}{16}|111001010\rangle$
$+\frac{\beta}{16}|110110011\rangle+\frac{\beta}{16}|110111011\rangle-\frac{\beta}{16}|101010100\rangle-\frac{\beta}{16}|101011100\rangle+\frac{\beta}{16}|100100101\rangle+\frac{\beta}{16}|100101101\rangle$
$+\frac{\beta}{16}|111000110\rangle+\frac{\beta}{16}|111001110\rangle-\frac{\beta}{16}|110110111\rangle-\frac{\beta}{16}|110111111\rangle+\frac{\beta}{16}|000010000\rangle-\frac{\beta}{16}|000011000\rangle$
$+\frac{\beta}{16}|001100001\rangle-\frac{\beta}{16}|001101001\rangle+\frac{\beta}{16}|010000010\rangle-\frac{\beta}{16}|010001010\rangle+\frac{\beta}{16}|011110011\rangle-\frac{\beta}{16}|011111011\rangle$
$-\frac{\beta}{16}|000010100\rangle+\frac{\beta}{16}|000011100\rangle-\frac{\beta}{16}|001100101\rangle+\frac{\beta}{16}|001101101\rangle-\frac{\beta}{16}|010000110\rangle+\frac{\beta}{16}|010001110\rangle$
$-\frac{\beta}{16}|011110111\rangle+\frac{\beta}{16}|011111111\rangle.$

Après la simplification de $|\psi_3\rangle$:

$|\psi_3\rangle = \frac{\alpha}{8}|100000000\rangle-\frac{\alpha}{8}|101110001\rangle+\frac{\alpha}{8}|110010010\rangle-\frac{\alpha}{8}|111100011\rangle-\frac{\alpha}{8}|100000100\rangle+\frac{\alpha}{8}|101110101\rangle-\frac{\alpha}{8}$
$|110010110\rangle+\frac{\alpha}{8}|111100111\rangle+\frac{\alpha}{8}|001000000\rangle+\frac{\alpha}{8}|000110001\rangle-\frac{\alpha}{8}|011010010\rangle-\frac{\alpha}{8}|010100011\rangle-\frac{\alpha}{8}|001000100\rangle-\frac{\alpha}{8}$
$|000110101\rangle+\frac{\alpha}{8}|011010110\rangle+\frac{\alpha}{8}|010100111\rangle+\frac{\alpha}{8}|110010000\rangle-\frac{\alpha}{8}|111100001\rangle+\frac{\alpha}{8}|100000010\rangle-\frac{\alpha}{8}|101110011\rangle-\frac{\alpha}{8}$

$|110010100\rangle+\frac{\alpha}{8}|111100101\rangle-\frac{\alpha}{8}|100000110\rangle+\frac{\alpha}{8}|101110111\rangle-\frac{\alpha}{8}|011010000\rangle-\frac{\alpha}{8}|010100001\rangle+\frac{\alpha}{8}|001000010\rangle+\frac{\alpha}{8}$
$|000110011\rangle+\frac{\alpha}{8}|011010100\rangle+\frac{\alpha}{8}|010100101\rangle-\frac{\alpha}{8}|001000110\rangle-\frac{\alpha}{8}|000110111\rangle+\frac{\alpha}{8}|010100000\rangle+\frac{\alpha}{8}|011010001\rangle-\frac{\alpha}{8}$
$|000110010\rangle-\frac{\alpha}{8}|001000011\rangle-\frac{\alpha}{8}|010100100\rangle-\frac{\alpha}{8}|011010101\rangle+\frac{\alpha}{8}|000110110\rangle+\frac{\alpha}{8}|001000111\rangle+\frac{\alpha}{8}|111100000\rangle-\frac{\alpha}{8}$
$|110010001\rangle+\frac{\alpha}{8}|101110010\rangle-\frac{\alpha}{8}|100000011\rangle-\frac{\alpha}{8}|111100100\rangle+\frac{\alpha}{8}|110010101\rangle-\frac{\alpha}{8}|101110110\rangle+\frac{\alpha}{8}|100000111\rangle-\frac{\alpha}{8}$
$|000110000\rangle-\frac{\alpha}{8}|001000001\rangle+\frac{\alpha}{8}|010100010\rangle+\frac{\alpha}{8}|011010011\rangle+\frac{\alpha}{8}|000110100\rangle+\frac{\alpha}{8}|001000101\rangle-\frac{\alpha}{8}|010100110\rangle-\frac{\alpha}{8}$
$|011010111\rangle+\frac{\alpha}{8}|101110000\rangle-\frac{\alpha}{8}|100000001\rangle+\frac{\alpha}{8}|111100010\rangle-\frac{\alpha}{8}|110010011\rangle-\frac{\alpha}{8}|101110100\rangle+\frac{\alpha}{8}|100000101\rangle-\frac{\alpha}{8}$
$|111100110\rangle+\frac{\alpha}{8}|110010111\rangle+\frac{\beta}{8}|010000000\rangle+\frac{\beta}{8}|011110001\rangle+\frac{\beta}{8}|000010010\rangle+\frac{\beta}{8}|001100011\rangle-\frac{\beta}{8}|010000100\rangle-\frac{\beta}{8}$
$|011110101\rangle-\frac{\beta}{8}|000010110\rangle-\frac{\beta}{8}|001100111\rangle-\frac{\beta}{8}|111000000\rangle+\frac{\beta}{8}|110110001\rangle+\frac{\beta}{8}|101010010\rangle-\frac{\beta}{8}|100100011\rangle+\frac{\beta}{8}$
$|111000100\rangle-\frac{\beta}{8}|110110101\rangle-\frac{\beta}{8}|101010110\rangle+\frac{\beta}{8}|100100111\rangle+\frac{\beta}{8}|000010000\rangle+\frac{\beta}{8}|001100001\rangle+\frac{\beta}{8}|010000010\rangle+\frac{\beta}{8}$
$|011110011\rangle-\frac{\beta}{8}|000010100\rangle-\frac{\beta}{8}|001100101\rangle-\frac{\beta}{8}|010000110\rangle-\frac{\beta}{8}|011110111\rangle+\frac{\beta}{8}|101010000\rangle-\frac{\beta}{8}|100100001\rangle-$
$\frac{\beta}{8}|111000010\rangle+\frac{\beta}{8}|110110011\rangle-\frac{\beta}{8}|101010100\rangle+\frac{\beta}{8}|100100101\rangle+\frac{\beta}{8}|111000110\rangle-\frac{\beta}{8}|110110111\rangle+\frac{\beta}{8}|100100000\rangle-\frac{\beta}{8}$
$|101010001\rangle-\frac{\beta}{8}|110110010\rangle+\frac{\beta}{8}|111000011\rangle-\frac{\beta}{8}|100100100\rangle+\frac{\beta}{8}|101010101\rangle+\frac{\beta}{8}|110110110\rangle-\frac{\beta}{8}|111000111\rangle-\frac{\beta}{8}$
$|001100000\rangle-\frac{\beta}{8}|000010001\rangle-\frac{\beta}{8}|011110010\rangle-\frac{\beta}{8}|010000011\rangle+\frac{\beta}{8}|001100100\rangle+\frac{\beta}{8}|000010101\rangle+\frac{\beta}{8}|011110110\rangle+\frac{\beta}{8}$
$|010000111\rangle-\frac{\beta}{8}|110110000\rangle+\frac{\beta}{8}|111000001\rangle+\frac{\beta}{8}|100100010\rangle-\frac{\beta}{8}|101010011\rangle+\frac{\beta}{8}|110110100\rangle-\frac{\beta}{8}|111000101\rangle-\frac{\beta}{8}$
$|100100110\rangle+\frac{\beta}{8}|101010111\rangle-\frac{\beta}{8}|011110000\rangle-\frac{\beta}{8}|010000001\rangle-\frac{\beta}{8}|001100010\rangle-\frac{\beta}{8}|000010011\rangle+\frac{\beta}{8}|011110100\rangle+\frac{\beta}{8}$
$|010000101\rangle+\frac{\beta}{8}|001100110\rangle+\frac{\beta}{8}|000010111\rangle.$

- Porte H(7) :

$|\psi_3\rangle=\frac{\alpha}{4\sqrt{2}}|000110100\rangle+\frac{\alpha}{4\sqrt{2}}|000110101\rangle\frac{\alpha}{4\sqrt{2}}|000110110\rangle+\frac{\alpha}{4\sqrt{2}}|000110111\rangle+\frac{\alpha}{4\sqrt{2}}|001000100\rangle-\frac{\alpha}{4\sqrt{2}}$
$|001000101\rangle+\frac{\alpha}{4\sqrt{2}}|001000110\rangle-\frac{\alpha}{4\sqrt{2}}|001000111\rangle+\frac{\alpha}{4\sqrt{2}}|010100100\rangle-\frac{\alpha}{4\sqrt{2}}|010100101\rangle+\frac{\alpha}{4\sqrt{2}}|010100110\rangle-$
$\frac{\alpha}{4\sqrt{2}}|010100111\rangle-\frac{\alpha}{4\sqrt{2}}|011010100\rangle+\frac{\alpha}{4\sqrt{2}}|011010101\rangle-\frac{\alpha}{4\sqrt{2}}|011010110\rangle+\frac{\alpha}{4\sqrt{2}}|011010111\rangle+\frac{\alpha}{4\sqrt{2}}|100000100\rangle$
$-\frac{\alpha}{4\sqrt{2}}|100000101\rangle+\frac{\alpha}{4\sqrt{2}}|100000110\rangle-\frac{\alpha}{4\sqrt{2}}|100000111\rangle+\frac{\alpha}{4\sqrt{2}}|101110100\rangle-\frac{\alpha}{4\sqrt{2}}|101110101\rangle+\frac{\alpha}{4\sqrt{2}}$
$|101110110\rangle-\frac{\alpha}{4\sqrt{2}}|101110111\rangle+\frac{\alpha}{4\sqrt{2}}|110010100\rangle-\frac{\alpha}{4\sqrt{2}}|110010101\rangle+\frac{\alpha}{4\sqrt{2}}|110010110\rangle-\frac{\alpha}{4\sqrt{2}}|110010111\rangle$
$+\frac{\alpha}{4\sqrt{2}}|111100100\rangle-\frac{\alpha}{4\sqrt{2}}|111100101\rangle+\frac{\alpha}{4\sqrt{2}}|111100110\rangle-\frac{\alpha}{4\sqrt{2}}|111100111\rangle+\frac{\beta}{4\sqrt{2}}|000010100\rangle-\frac{\beta}{4\sqrt{2}}$
$|000010101\rangle+\frac{\beta}{4\sqrt{2}}|000010110\rangle-\frac{\beta}{4\sqrt{2}}|000010111\rangle-\frac{\beta}{4\sqrt{2}}|001100100\rangle+\frac{\beta}{4\sqrt{2}}|001100101\rangle-\frac{\beta}{4\sqrt{2}}|001100110\rangle$
$+\frac{\beta}{4\sqrt{2}}|001100111\rangle+\frac{\beta}{4\sqrt{2}}|010000100\rangle-\frac{\beta}{4\sqrt{2}}|010000101\rangle+\frac{\beta}{4\sqrt{2}}|010000110\rangle-\frac{\beta}{4\sqrt{2}}|010000111\rangle-\frac{\beta}{4\sqrt{2}}|011110100\rangle$
$+\frac{\beta}{4\sqrt{2}}|011110101\rangle-\frac{\beta}{4\sqrt{2}}|011110110\rangle+\frac{\beta}{4\sqrt{2}}|011110111\rangle+\frac{\beta}{4\sqrt{2}}|100100100\rangle-\frac{\beta}{4\sqrt{2}}|100100101\rangle+\frac{\beta}{4\sqrt{2}}$
$|100100110\rangle-\frac{\beta}{4\sqrt{2}}|100100111\rangle+\frac{\beta}{4\sqrt{2}}|101010100\rangle-\frac{\beta}{4\sqrt{2}}|101010101\rangle+\frac{\beta}{4\sqrt{2}}|101010110\rangle-\frac{\beta}{4\sqrt{2}}|101010111\rangle-\frac{\beta}{4\sqrt{2}}$
$|110110100\rangle+\frac{\beta}{4\sqrt{2}}|110110101\rangle-\frac{\beta}{4\sqrt{2}}|110110110\rangle+\frac{\beta}{4\sqrt{2}}|110110111\rangle-\frac{\beta}{4\sqrt{2}}|111000100\rangle+\frac{\beta}{4\sqrt{2}}|111000101\rangle-$
$\frac{\beta}{4\sqrt{2}}|111000110\rangle+\frac{\beta}{4\sqrt{2}}|111000111\rangle$

- Porte H(8) :

$|\psi_3\rangle=\frac{\beta}{4}|000010100\rangle-\frac{\beta}{4}|000010101\rangle-\frac{\alpha}{4}|000110100\rangle+\frac{\alpha}{4}|000110101\rangle+\frac{\alpha}{4}|001000100\rangle-\frac{\alpha}{4}|001000101\rangle-$
$\frac{\beta}{4}|001100100\rangle+\frac{\beta}{4}|001100101\rangle+\frac{\beta}{4}|010000100\rangle-\frac{\beta}{4}|010000101\rangle+\frac{\alpha}{4}|010100100\rangle-\frac{\alpha}{4}|010100101\rangle-\frac{\alpha}{4}|011010100\rangle$
$+\frac{\alpha}{4}|011010101\rangle-\frac{\beta}{4}|011110100\rangle+\frac{\beta}{4}|011110101\rangle+\frac{\alpha}{4}|100000100\rangle-\frac{\alpha}{4}|100000101\rangle+\frac{\beta}{4}|100100100\rangle-$
$\frac{\beta}{4}|100100101\rangle+\frac{\beta}{4}|101010100\rangle-\frac{\beta}{4}|101010101\rangle+\frac{\alpha}{4}|101110100\rangle-\frac{\alpha}{4}|101110101\rangle+\frac{\alpha}{4}|110010100\rangle-\frac{\alpha}{4}|110010101\rangle-$
$\frac{\beta}{4}|110110100\rangle+\frac{\beta}{4}|110110101\rangle-\frac{\beta}{4}|111000100\rangle+\frac{\beta}{4}|111000101\rangle+\frac{\alpha}{4}|111100100\rangle-\frac{\alpha}{4}|111100101$

- Porte H(9) :

$|\psi_3\rangle = \frac{\beta}{2\sqrt{2}}|00001\mathbf{0101}\rangle - \frac{\alpha}{2\sqrt{2}}|00011\mathbf{0101}\rangle + \frac{\alpha}{2\sqrt{2}}|00100\mathbf{0101}\rangle - \frac{\beta}{2\sqrt{2}}|00110\mathbf{0101}\rangle + \frac{\beta}{2\sqrt{2}}|01000\mathbf{0101}\rangle$
$+\frac{\alpha}{2\sqrt{2}}|01010\mathbf{0101}\rangle - \frac{\alpha}{2\sqrt{2}}|01101\mathbf{0101}\rangle - \frac{\beta}{2\sqrt{2}}|01111\mathbf{0101}\rangle + \frac{\alpha}{2\sqrt{2}}|10000\mathbf{0101}\rangle + \frac{\beta}{2\sqrt{2}}|10010\mathbf{0101}\rangle$
$+\frac{\beta}{2\sqrt{2}}|10101\mathbf{0101}\rangle + \frac{\alpha}{2\sqrt{2}}|10111\mathbf{0101}\rangle + \frac{\alpha}{2\sqrt{2}}|11001\mathbf{0101}\rangle - \frac{\beta}{2\sqrt{2}}|11011\mathbf{0101}\rangle - \frac{\beta}{2\sqrt{2}}|11100\mathbf{0101}\rangle$
$+\frac{\alpha}{2\sqrt{2}}|11110\mathbf{0101}\rangle$

❖ Correction d'erreur :

Résultat de mesure = 0101, donc erreur de type X1

✓ La correction : appliquer la porte X sur le premier qubit :

$|\psi_4\rangle = \frac{\beta}{2\sqrt{2}}|100010101\rangle - \frac{\alpha}{2\sqrt{2}}|100110101\rangle + \frac{\alpha}{2\sqrt{2}}|101000101\rangle - \frac{\beta}{2\sqrt{2}}|101100101\rangle + \frac{\beta}{2\sqrt{2}}|110000101\rangle$
$+\frac{\alpha}{2\sqrt{2}}|110100101\rangle - \frac{\alpha}{2\sqrt{2}}|111010101\rangle - \frac{\beta}{2\sqrt{2}}|111110101\rangle + \frac{\alpha}{2\sqrt{2}}|000000101\rangle + \frac{\beta}{2\sqrt{2}}|000100101\rangle + \frac{\beta}{2\sqrt{2}}|001010101\rangle$
$+\frac{\alpha}{2\sqrt{2}}|001110101\rangle + \frac{\alpha}{2\sqrt{2}}|010010101\rangle - \frac{\beta}{2\sqrt{2}}|010110101\rangle - \frac{\beta}{2\sqrt{2}}|011000101\rangle + \frac{\alpha}{2\sqrt{2}}|011100101\rangle$

✓ Suppression des quatre qubits du syndrome:

$|\psi_4\rangle = \frac{\beta}{2\sqrt{2}}|10001\rangle - \frac{\alpha}{2\sqrt{2}}|10011\rangle + \frac{\alpha}{2\sqrt{2}}|10100\rangle - \frac{\beta}{2\sqrt{2}}|10110\rangle + \frac{\beta}{2\sqrt{2}}|11000\rangle + \frac{\alpha}{2\sqrt{2}}|11010\rangle - \frac{\alpha}{2\sqrt{2}}|11101\rangle -$
$\frac{\beta}{2\sqrt{2}}|11111\rangle + \frac{\alpha}{2\sqrt{2}}|00000\rangle + \frac{\beta}{2\sqrt{2}}|00010\rangle + \frac{\beta}{2\sqrt{2}}|00101\rangle + \frac{\alpha}{2\sqrt{2}}|00111\rangle + \frac{\alpha}{2\sqrt{2}}|01001\rangle - \frac{\beta}{2\sqrt{2}}|01011\rangle -$
$\frac{\beta}{2\sqrt{2}}|01100\rangle + \frac{\alpha}{2\sqrt{2}}|01110\rangle$

❖ Décodage :

Application de circuit de décodage :

- Porte CNot(5,2) :

$|\psi_5\rangle =$
$\frac{\beta}{2\sqrt{2}}|11001\rangle - \frac{\alpha}{2\sqrt{2}}|11011\rangle + \frac{\alpha}{2\sqrt{2}}|10100\rangle - \frac{\beta}{2\sqrt{2}}|10110\rangle + \frac{\beta}{2\sqrt{2}}|11000\rangle + \frac{\alpha}{2\sqrt{2}}|11010\rangle - \frac{\alpha}{2\sqrt{2}}|10101\rangle -$
$\frac{\beta}{2\sqrt{2}}|10111\rangle + \frac{\alpha}{2\sqrt{2}}|00000\rangle + \frac{\beta}{2\sqrt{2}}|00010\rangle + \frac{\beta}{2\sqrt{2}}|01101\rangle + \frac{\alpha}{2\sqrt{2}}|01111\rangle + \frac{\alpha}{2\sqrt{2}}|00001\rangle - \frac{\beta}{2\sqrt{2}}|00011\rangle -$
$\frac{\beta}{2\sqrt{2}}|01100\rangle + \frac{\alpha}{2\sqrt{2}}|01110\rangle$

- Porte H(5) :

$|\psi_5\rangle = \frac{\beta}{4}|11000\rangle - \frac{\beta}{4}|11001\rangle - \frac{\alpha}{4}|11010\rangle + \frac{\alpha}{4}|11011\rangle + \frac{\alpha}{4}|10100\rangle + \frac{\alpha}{4}|10101\rangle - \frac{\beta}{4}|10110\rangle -$
$\frac{\beta}{4}|10111\rangle + \frac{\beta}{4}|11000\rangle + \frac{\beta}{4}|11001\rangle + \frac{\alpha}{4}|11010\rangle + \frac{\alpha}{4}|11011\rangle - \frac{\alpha}{4}|1010\rangle + \frac{\alpha}{4}|10101\rangle - \frac{\beta}{4}|10110\rangle + \frac{\beta}{4}|10111\rangle + \frac{\alpha}{4}$
$|00000\rangle + \frac{\alpha}{4}|00001\rangle + \frac{\beta}{4}|00010\rangle + \frac{\beta}{4}|00011\rangle + \frac{\beta}{4}|01100\rangle - \frac{\beta}{4}|01101\rangle + \frac{\alpha}{4}|01110\rangle - \frac{\alpha}{4}|01111\rangle + \frac{\alpha}{4}|00000\rangle - \frac{\alpha}{4}$
$|00001\rangle - \frac{\beta}{4}|00010\rangle + \frac{\beta}{4}|00011\rangle - \frac{\beta}{4}|01100\rangle - \frac{\beta}{4}|01101\rangle + \frac{\alpha}{4}|01110\rangle + \frac{\alpha}{4}|01111\rangle$

Après la simplification :

$|\psi_5\rangle = \frac{\beta}{2}|11000\rangle + \frac{\alpha}{2}|11011\rangle + \frac{\alpha}{2}|10101\rangle - \frac{\beta}{2}|10110\rangle + \frac{\alpha}{2}|01110\rangle + \frac{\alpha}{2}|00000\rangle + \frac{\beta}{2}|00011\rangle - \frac{\beta}{2}|01101\rangle$

- Porte CNot(1,2) :

$|\psi_5\rangle = \frac{\beta}{2}|10000\rangle + \frac{\alpha}{2}|10011\rangle + \frac{\alpha}{2}|11101\rangle - \frac{\beta}{2}|11110\rangle + \frac{\alpha}{2}|01110\rangle + \frac{\alpha}{2}|00000\rangle + \frac{\beta}{2}|00011\rangle - \frac{\beta}{2}|01101\rangle$

- Porte CNot(3,4) :

$|\psi_5\rangle = \frac{\beta}{2}|10000\rangle + \frac{\alpha}{2}|10011\rangle + \frac{\alpha}{2}|11111\rangle - \frac{\beta}{2}|11100\rangle + \frac{\alpha}{2}|01100\rangle + \frac{\alpha}{2}|00000\rangle + \frac{\beta}{2}|00011\rangle - \frac{\beta}{2}|01111\rangle$

- Porte CNot(4,5) :

$|\psi_5\rangle = \frac{\beta}{2}|10000\rangle + \frac{\alpha}{2}|10010\rangle + \frac{\alpha}{2}|11110\rangle - \frac{\beta}{2}|11100\rangle + \frac{\alpha}{2}|01100\rangle + \frac{\alpha}{2}|00000\rangle + \frac{\beta}{2}|00010\rangle - \frac{\beta}{2}|01110\rangle$

- Porte CNot(4,1) :

$|\psi_5\rangle = \frac{\beta}{2}|10000\rangle + \frac{\alpha}{2}|00010\rangle + \frac{\alpha}{2}|01110\rangle - \frac{\beta}{2}|11100\rangle + \frac{\alpha}{2}|01100\rangle + \frac{\alpha}{2}|00000\rangle + \frac{\beta}{2}|10010\rangle - \frac{\beta}{2}|11110\rangle$

- Porte H(4) :

$|\psi_5\rangle = \frac{\beta}{2}|10000\rangle + \frac{\beta}{2}|10010\rangle + \frac{\alpha}{2}|00000\rangle - \frac{\alpha}{2}|00010\rangle + \frac{\alpha}{2}|01100\rangle - \frac{\alpha}{2}|01110\rangle - \frac{\beta}{2}|11100\rangle - \frac{\beta}{2}|11110\rangle + \frac{\alpha}{2}|01100\rangle + \frac{\alpha}{2}|01110\rangle + \frac{\alpha}{2}|00000\rangle + \frac{\alpha}{2}|00010\rangle + \frac{\beta}{2}|10000\rangle - \frac{\beta}{2}|10010\rangle - \frac{\beta}{2}|11100\rangle + \frac{\beta}{2}|11110\rangle$

Après la simplification :

$|\psi_5\rangle = \frac{\beta}{\sqrt{2}}|10000\rangle + \frac{\alpha}{\sqrt{2}}|00000\rangle + \frac{\alpha}{\sqrt{2}}|01100\rangle - \frac{\beta}{\sqrt{2}}|11100\rangle$

- Porte CNot(2,3) :

$|\psi_5\rangle = \frac{\beta}{\sqrt{2}}|10000\rangle + \frac{\alpha}{\sqrt{2}}|00000\rangle + \frac{\alpha}{\sqrt{2}}|01000\rangle - \frac{\beta}{\sqrt{2}}|11000\rangle$

- Porte H(2) :

$|\psi_5\rangle = \frac{\beta}{2}|10000\rangle + \frac{\beta}{2}|11000\rangle + \frac{\alpha}{2}|00000\rangle + \frac{\alpha}{2}|01000\rangle + \frac{\alpha}{2}|00000\rangle - \frac{\alpha}{2}|01000\rangle - \frac{\beta}{2}|10000\rangle + \frac{\beta}{2}|11000\rangle$

Après la simplification :

$|\psi_5\rangle = \alpha\ |00000\rangle + \beta\ |11000\rangle$

- Porte CNot(1,2) :

$|\psi_5\rangle = \alpha|00000\rangle + \beta\ |10000\rangle$

✓ Suppression des qubits auxiliaires :

$|\ \psi\ \rangle = \alpha|0\rangle + \beta\ |1\rangle$

III.7. Conclusion :

Dans ce chapitre, nous avons présenté un nouveau correcteur quantique basé sur les codes stabilisateurs. L'idée de base est de trouver un encodage tel que :

- On peut définir un ensemble d'opérateurs qui ont la particularité d'avoir comme vecteurs propres les états erronés ainsi que l´état sans erreur.
- La mesure des valeurs propres associées à ces opérateurs ne modifie pas l'état traité.
- Le résultat de la mesure signe sans ambiguïté le type d'erreur. Une fois l'erreur détectée, il suffit d'apporter la correction adéquate.

Dans la solution proposée, il s'agit d'un encodeur à 5 qubits utilisant 10 portes quantiques seulement. Les propriétés spécifiques des opérateurs de Pauli nous a permis de repérer facilement l'ensemble des stabilisateurs. Pour valider notre proposition, une vérification manuelle des résultats a été réalisé. On a constaté que c'est une tâche très difficile, donc l'automatisation des calculs par un simulateur constitue la solution la plus appropriée. Cela fera l'objet du chapitre suivant.